ENGINE LOGBOOK

PT6C Turboshaft

PCE- KB0163

N811TA

Pratt & Whitney Canada

A United Technologies Company

CONFIDENTIAL – SUBJECT TO PROTECTIVE ORDER BRISTOW 010885

Ordre de Transfert
Transfer Order

Mouvement
Movement 501 (GI receipt w/o PO)

Article
Item 0002

No. 0000071194

Date

P&WC JR3-6911-E(2019-10)

N° d'établissment Plant No.	0005	N° de Document Number	4524429724	March. recus le Goods Receipt Date	2019.12.23
Description	Pratt & Whitney Canada			Date du Iour Current Date	2019.12.23
Lieu d'entrepos. Storage Location	5CU	Notre n ° de référence Our Reference No.			
Bon de commande Sales Order		N° de suivi Tracking No.		Date d'expiration Expiration Date	

Matière Material	3045377-01			Quantité Quantity	1 EA
Description	POWER SECTION MODULE	Lot Batch	KB0163	Lot de verification Inspection Lot	0500004219342
SIMDUT WHMIS		Info. d'inspection Inspection Info			
No. de Série Serial No.	KB0163				

Information d'entreposage - Warehouse Information

					Source	Destination
Destinataire Recipient						
Point de décharg. Unloading Point		Demande de transfert n° Transf. Require. No	0000062441	Type de stockage Storage Type	902	001
Cycle opér. Kanban Kanban Control		Priorité Priority		Bac de stockage Storage Bin	GR-AREA	PL5-H9
Zone d'approv. Kanban Kanban		Stock spécial Special Stock	Q	Type d'évaluation Valuation Type		CUSTOMER
Élément WBS Element	C-032573	ERA Helicopters LLC				
Nota Text Notes				Profil de N° série Serial Profile	0005	

Émis par
Issued By PW55601

Signature ----------

Fin du document
End-of-document

Ordre de Transfert
Transfer Order

Mouvement / Movement **501 (GI receipt w/o PO)**

Article / Item 0001

No. 0000071194

Date

P&WC JR3-6911-E(2019-10)

Nº d'établissment / Plant No.	0005	Nº de Document Number	4524429724	March. recus le / Goods Receipt Date	2019.12.23
Description	Pratt & Whitney Canada			Date du lour / Current Date	2019.12.23
Lieu d'entrepos. / Storage Location	5CU	Notre n ° de référence / Our Reference No.			
Bon de commande / Sales Order		Nº de suivi / Tracking No.		Date d'expiration / Expiration Date	

Matière / Material	3045378-01			Quantité / Quantity	1 EA
Description	GAS GENERATOR MODULE	Lot / Batch	KB0163	Lot de verification / Inspection Lot	0500004219335
SIMDUT / WHMIS		Info. d'inspection / Inspection Info			
No. de Série / Serial No.	KB0163				

Information d'entreposage - Warehouse Information

					Source	Destination
Destinataire / Recipient						
Point de décharg. / Unloading Point		Demande de transfert nº / Transf. Require. No	0000062441	Type de stockage / Storage Type	902	001
Cycle opér. Kanban / Kanban Control		Priorité / Priority		Bac de stockage / Storage Bin	GR-AREA	PL5-H9
Zone d'approv. Kanban / Kanban		Stock spécial / Special Stock	Q	Type d'évaluation / Valuation Type		CUSTOMER
Élément WBS Element	C-032573	ERA Helicopters LLC				
Nota / Text Notes				Profil de Nº série / Serial Profile	0005	

Émis par / Issued By: PW55601

Signature ----------

Fin du document
End-of-document

Commercial Invoice

This invoice must be completed in English.

EXPORTER:
Tax ID#:
Contact Name: KARL WATSON
Telephone No.: (337) 656-4805
E-Mail: MILANDRY@ERAHELICOPTERS.COM
Company Name/Address:
ERA HELICOPTERS LLC
600 AIRPORT SERVICE RD

LAKE CHARLES LA 70605
Country/Territory: UNITED STATES OF AMERICA
Parties to Transaction:
☐ Related ☒ Non-Related

Ship Date: 17 Dec, 2019
Air Waybill No. / Tracking No.: 779019459666
Invoice No.:
Purchase Order No.: RO030534-2019
Payment Terms:
Bill of Lading:
Purpose of Shipment: Commercial

CONSIGNEE:
Tax ID#:
Contact Name: LYNN LAGAC
Telephone No.: (450) 468-7897
E-Mail:
Company Name/Address:
PRATT & WITHNEY CANADA
7007 de La Savane

SAINT-HUBERT PQ J3Y8Y9
Country/Territory: CANADA

SOLD TO / IMPORTER (if different from Consignee):
☒ Same as CONSIGNEE:
Tax ID#:
Company Name/Address:

Country/Territory: CANADA

If there is a designated broker for this shipment, please provide contact information.
Name of Broker **Tel. No.** **Contact Name**
Duties and Taxes Payable by ☐ Exporter ☐ Consignee ☐ Other **If Other, please specify**

No. of Packages	No. of Units	Net Weight (LBS / KGS)	Unit of Measure	Description of Goods	Harmonized Tariff Number	Country of Manufacture	Unit Value	Total Value
	1.00	760.00	EA	ENGINE PT6C-67C	8411814010	CA	226,219.600000	226,219.60

Total Pkgs	Total Units	Total Net Weight (Indicate LBS/KGS)	Total Gross Weight (Indicate LBS/KGS)	Terms of Sale: FCA
1	1.00	760.00 LB	760.00 LB	

Subtotal:	226,219.60
Insurance:	0.00
Freight:	0 00
Packing:	0.00
Handling:	0.00
Other:	0.00
Invoice Total:	226,219.60
Currency Code:	USD

Special Instructions:

Declaration Statement(s):
These items are controlled by the U S Government and authorized for export only to the country of ultimate destination for use by the ultimate consignee or end-user(s) herein identified They may not be resold, transferred, or otherwise disposed of, to any other country or to any person other than the authorized ultimate consignee or end-user(s), either in their original form or after being incorporated into other items, without first obtaining approval from the U S government or as otherwise authorized by U S law and regulations

I declare that all the information contained in this invoice to be true and correct.

Originator or Name of Company Representative if the invoice is being completed on behalf of a company or individual:
KARL WATSON

Signature / Title / Date: 12/17/19 17 Dec, 2019

REV. 04.10.13-1.08

Commercial Invoice

This invoice must be completed in English.

EXPORTER:
Tax ID#:
Contact Name: KARL WATSON
Telephone No.: (337) 656-4805
E-Mail: MILANDRY@ERAHELICOPTERS.COM
Company Name/Address:
ERA HELICOPTERS LLC
600 AIRPORT SERVICE RD

LAKE CHARLES LA 70605
Country/Territory: UNITED STATES OF AMERICA
Parties to Transaction:
☐ Related ☒ Non-Related

Ship Date:
17 Dec, 2019
Air Waybill No. / Tracking No.:
779019459666
Invoice No.:
Purchase Order No.:
RO030534-2019
Payment Terms:
Bill of Lading:
Purpose of Shipment:
Commercial

CONSIGNEE:
Tax ID#:
Contact Name: LYNN LAGAC
Telephone No.: (450) 468-7897
E-Mail:
Company Name/Address:
PRATT & WITHNEY CANADA
7007 de La Savane

SAINT-HUBERT PQ J3Y8Y9
Country/Territory: CANADA

SOLD TO / IMPORTER (if different from Consignee):
☒ **Same as CONSIGNEE:**
Tax ID#:
Company Name/Address:

Country/Territory: CANADA

If there is a designated broker for this shipment, please provide contact information.
Name of Broker **Tel. No.** **Contact Name**
Duties and Taxes Payable by ☐ Exporter ☐ Consignee ☐ Other **If Other, please specify**

No. of Packages	No. of Units	Net Weight (LBS / KGS)	Unit of Measure	Description of Goods	Harmonized Tariff Number	Country of Manufacture	Unit Value	Total Value
	1.00	760.00	EA	ENGINE PT6C-67C	8411814010	CA	226,219.600000	226,219.60

Total Pkgs	Total Units	Total Net Weight (Indicate LBS/KGS)	Total Gross Weight (Indicate LBS/KGS)	Terms of Sale: FCA
1	1.00	760.00 LB	760.00 LB	

Subtotal:	226,219.60
Insurance:	0.00
Freight:	0 00
Packing:	0.00
Handling:	0 00
Other:	0.00
Invoice Total:	226,219.60
Currency Code:	USD

Special Instructions:

Declaration Statement(s):
These items are controlled by the U S Government and authorized for export only to the country of ultimate destination for use by the ultimate consignee or end-user(s) herein identified They may not be resold, transferred, or otherwise disposed of, to any other country or to any person other than the authorized ultimate consignee or end-user(s), either in their original form or after being incorporated into other items, without first obtaining approval from the U S government or as otherwise authorized by U S law and regulations

I declare that all the information contained in this invoice to be true and correct.

Originator or Name of Company Representative if the invoice is being completed on behalf of a company or individual:
KARL WATSON

Signature / Title / Date: 12/17/19 17 Dec, 2019

REV. 04.10.13-1.08

Commercial Invoice

This invoice must be completed in English.

EXPORTER:
Tax ID#:
Contact Name: KARL WATSON
Telephone No.: (337) 656-4805
E-Mail: MILANDRY@ERAHELICOPTERS COM
Company Name/Address:
ERA HELICOPTERS LLC
600 AIRPORT SERVICE RD

LAKE CHARLES LA 70605
Country/Territory: UNITED STATES OF AMERICA
Parties to Transaction:
☐ Related ☒ Non-Related

Ship Date: 17 Dec, 2019
Air Waybill No. / Tracking No.: 779019459666
Invoice No.:
Purchase Order No.: RO030534-2019
Payment Terms:
Bill of Lading:
Purpose of Shipment: Commercial

CONSIGNEE:
Tax ID#:
Contact Name: LYNN LAGAC
Telephone No.: (450) 468-7897
E-Mail:
Company Name/Address:
PRATT & WITHNEY CANADA
7007 de La Savane

SAINT-HUBERT PQ J3Y8Y9
Country/Territory: CANADA

SOLD TO / IMPORTER (if different from Consignee):
☒ **Same as CONSIGNEE:**
Tax ID#:
Company Name/Address:
Country/Territory: CANADA

If there is a designated broker for this shipment, please provide contact information.
Name of Broker **Tel. No.** **Contact Name**
Duties and Taxes Payable by ☐ Exporter ☐ Consignee ☐ Other **If Other, please specify**

No. of Packages	No. of Units	Net Weight (LBS / KGS)	Unit of Measure	Description of Goods	Harmonized Tariff Number	Country of Manufacture	Unit Value	Total Value
	1.00	760.00	EA	ENGINE PT6C-67C	8411814010	CA	226,219.600000	226,219.60

Total Pkgs	Total Units	Total Net Weight (Indicate LBS/KGS)	Total Gross Weight (Indicate LBS/KGS)	Terms of Sale: FCA
1	1.00	760.00 LB	760.00 LB	

Subtotal:	226,219.60
Insurance:	0.00
Freight:	0.00
Packing:	0.00
Handling:	0.00
Other:	0.00
Invoice Total:	226,219.60
Currency Code:	USD

Special Instructions:

Declaration Statement(s):
These items are controlled by the U S Government and authorized for export only to the country of ultimate destination for use by the ultimate consignee or end-user(s) herein identified They may not be resold, transferred, or otherwise disposed of, to any other country or to any person other than the authorized ultimate consignee or end-user(s), either in their original form or after being incorporated into other items, without first obtaining approval from the U S government or as otherwise authorized by U S law and regulations

I declare that all the information contained in this invoice to be true and correct.

Originator or Name of Company Representative if the invoice is being completed on behalf of a company or individual:
KARL WATSON

Signature / Title / Date: 12/17/19 17 Dec, 2019

REV. 04.10.13-1.08

Commercial Invoice

This invoice must be completed in English.

EXPORTER:
Tax ID#:
Contact Name: KARL WATSON
Telephone No.: (337) 656-4805
E-Mail: MILANDRY@ERAHELICOPTERS.COM
Company Name/Address:
ERA HELICOPTERS LLC
600 AIRPORT SERVICE RD

LAKE CHARLES LA 70605
Country/Territory: UNITED STATES OF AMERICA
Parties to Transaction:
☐ Related ☒ Non-Related

Ship Date:
17 Dec, 2019
Air Waybill No. / Tracking No.:
779019459666
Invoice No.:
Purchase Order No.:
RO030534-2019
Payment Terms:
Bill of Lading:
Purpose of Shipment:
Commercial

CONSIGNEE:
Tax ID#:
Contact Name: LYNN LAGAC
Telephone No.: (450) 468-7897
E-Mail:
Company Name/Address:
PRATT & WITHNEY CANADA
7007 de La Savane

SAINT-HUBERT PQ J3Y8Y9
Country/Territory: CANADA

SOLD TO / IMPORTER (if different from Consignee):
☒ **Same as CONSIGNEE:**
Tax ID#:
Company Name/Address:
Country/Territory: CANADA

If there is a designated broker for this shipment, please provide contact information.
Name of Broker **Tel. No.** **Contact Name**
Duties and Taxes Payable by ☐ Exporter ☐ Consignee ☐ Other **If Other, please specify**

No. of Packages	No. of Units	Net Weight (LBS / KGS)	Unit of Measure	Description of Goods	Harmonized Tariff Number	Country of Manufacture	Unit Value	Total Value
	1.00	760.00	EA	ENGINE PT6C-67C	8411814010	CA	226,219.600000	226,219.60

Total Pkgs	Total Units	Total Net Weight (Indicate LBS/KGS)	Total Gross Weight (Indicate LBS/KGS)	Terms of Sale: FCA
1	1.00	760.00 LB	760.00 LB	

Subtotal:	226,219.60
Insurance:	0.00
Freight:	0.00
Packing:	0.00
Handling:	0.00
Other:	0.00
Invoice Total:	226,219.60
Currency Code:	USD

Special Instructions:

Declaration Statement(s):
These items are controlled by the U S Government and authorized for export only to the country of ultimate destination for use by the ultimate consignee or end-user(s) herein identified They may not be resold, transferred, or otherwise disposed of, to any other country or to any person other than the authorized ultimate consignee or end-user(s), either in their original form or after being incorporated into other items, without first obtaining approval from the U S government or as otherwise authorized by U S law and regulations

I declare that all the information contained in this invoice to be true and correct.

Originator or Name of Company Representative if the invoice is being completed on behalf of a company or individual:
KARL WATSON

Signature / Title / Date: 12/17/19 17 Dec, 2019

REV. 04.10.13-1.08

BOL #: PU Date:
PO #: R0030534-2019 Weight: 760
Phone: 4504687897 COD:
H/U: 1 DV: 0

Shipping: 2529.05
Discounts: 2073.82
Special: 166.34
Total: 621.57

Svcs: PRIORITY DG
TRCK: 7790 1945 9666

ORIGIN ID:LCH (337) 656-4805
KARL WATSON
ERA HELICOPTERS LLC
600 AIRPORT SERVICE RD

LAKE CHARLES, LA 70605
UNITED STATES US

CREATED: 17DEC19
ACTWGT: 760.00 LB
CAD: 0809228/CAFE3310
DIMS: 82x35x32 IN
BILL SENDER

TO **PRATT & WITHNEY CANADA**
LYNN LAGAC
7007 DE LA SAVANE

SAINT – HUBERT PQ J3Y8Y9 **(CA)**

(450) 468 – 7897 SNDR:
SNDR:
CNDR:
PO: R0030534-2019
BOL:

FedEx
Freight

J192119091902av

TRK# 8600 **7790 1945 9666**

PRIORITY
DG
J3Y 8Y9
LCH PQ – CA **MON**

THIS PAGE IS PROVIDED FOR

INSERTION BETWEEN THE

BINDER AND THE FIRST

PAGE OF THE MANUAL. IT

WILL PREVENT THE PRINTED

TEXT FROM ADHERING TO

THE INSIDE BINDER COVER.

CONFIDENTIAL – SUBJECT TO PROTECTIVE ORDER BRISTOW 010893

Index of Engine Documentation

Engine Number: PCE- KB0163

Document Name	Quantity of Documents
Final Acceptance Test Record Sheet	1
Engine Serialized Component Summary	(Quantity of set) X (Quantity per set) 1 X 6
Life Limited Material History Record	9
Life Limited Blades History Record(when applicable)	3
Engine Build Record Status Report (SB)	(Quantity of set) X (Quantity per set) 1 X 1 Note: (1) copy or set is staple in the SB section of the Yellow Book
Engine Log Book (Yellow Book)	2
Final Vibration Survey (when applicable)	N/A
Authorized Released Certificate(Form 24-0078)	1
Date	March 26, 2006

Note: This index reflects the quantity of Shipping Documentation supplied with the engine

Issue Date: June 10, 2000

1. Autorité de l'aviation civile / Pays qui approuve le bon de sortie Approving Civil Aviation Authority / Country **Transport Canada** **Transports Canada**	2. **BON DE SORTIE AUTORISÉE** **AUTHORIZED RELEASE CERTIFICATE** **FORM ONE**	3. N° de suivie du formulaire – Form Tracking No. 216894 PCE - KB0163
4. Nom et adresse de l'organisme – Organization Name and Address **Pratt & Whitney Canada** Une société de United Technologies /A United Technologies Company Pratt & Whitney Canada Corp. SERVICE CENTRE ST-HUBERT 7007 de la Savane St-Hubert, Quebec Canada J3Y 3X7		5. Bon de travail/contrat/facture – Work Order /Contract/Invoice 216894 PCE - KB0163

6. Article Item	7. Description	8. Numéro de pièce Part No	9. Qtée Qty	10. N° de série/de lot Serial/Batch No.	11. Situation / Travail Status / Work
0001	ENGINE ASSEMBLY COMPLETE	3045379-01	0001	PCE - KB0163	OVERHAULED

12. Remarques - Remarks

OVERHAULED IN A/W PT6C-67C OVERHAUL MANUAL P/N 3045333 REV:15
AND APPROVED DATA.
REFER TO ENGINE LOGBOOK AND ITS ATTACHMENT(S) FOR FURTHER DETAILS.

CURRENT SERVICE LIFE IS: TTSN: 4991.9 TTSO: 0.0

" Work has been carried-out in accordance with : "
EU regulations EASA under approval No. EASA. 145.7098

B$ 1019

13 a. Le present bon de sorts certife que les articles indiqués ci-dessus ont été construits conformément à :
Certifies that the items identified above were manufactured in conformity to :

☐ Des données de conception approuvées et qu'ils peuvent être utilisés en toute sécurité.
Approved design data and are in condition for safe operation.

☐ Des données de conception non approuvées indiquées à la case 12.
Non approved design data specified in block 12.

14a. [X] RAC 571.10 (certification après maintenance) – CAR 571.10 Maintenance Release.

[X] Autres réglementation précisée à la case 12 – Other regulations specified in block 12.

Le présent bon de sortie certifie que, sauf indication contraire à la case 12, le travail indiqué à la case 11 et décrit à la case 12, à été effectué conformément au Règlement de l'aviation canadien.
Certifies that, unless otherwise specified in block 12, the work identified in block 11 and described in block 12, has been performed in compliance with the Canadian Aviation Regulations.

13b. Signature	13 c. Numéro de l'organisme agrée Approved Organization Number	14 b. Signature	14c. . Numéro de l'organisme agrée Approved Organization Number **AMO 20-00**
13d. Nom - Name	13e. Date (jj/mmm/aaaa – dd/mmm/yyyy)	14d. Nom - Name Marc-André Poitras PWC AMO 20-00 AI 2	14e. Date (jj/mmm/aaaa – dd/mmm/yyyy) 07 MAY 2020

* Responsabilité du monteur

Le présent bon de sortie ne constitue pas une autorisation de montage.

Le monteur qui travaille conformément à la réglementation d'un pays autre que celui spécifié à la case 1 doit s'assurer que la réglementation en question reconnaît la certification du pays ainsi spécifié.

Les déclarations des cases 13a et 14a ne constituent pas une certification de montage. Dans tous les cas, le dossier technique de l'aéronef doit inclure une certification de montage délivrée conformément à la réglementation nationale qui s'applique, avant que l'aéronef puisse voler.

* Installer Responsibilities

This certificate does not constitute authority to install.

Installers working in accordance with the national regulations of a country other than that specified in block 1 must ensure that their regulations recognize certifications from the country specified.

Statements in block 13a and a 14a do not constitute installation certification. In all cases the technical record for the aircraft must contain an Installation certification issued in accordance with the applicable national regulations before the aircraft may be flown.

P&WC 11198 (2013-01) / P&WC JR3_00552_E (2012-04)

PRATT & WHITNEY CANADA CORP. P68 PROGRAM 4.4.50

PT6C-67C S/N:PCE-KB0163 OVERHAUL TEST RECORD

2020 MAY 06 TEST CELL : 0112

TESTED AS PER OH MANUAL REV (15) APPLICABLE SB :

FINAL VANE FLOW AREAS FIRST STAGE : 2S7 6.83
SECOND STAGE : 2S2 22.60

PERFORMANCE DATA		PERF.ACCEPTANCE SPEC	PERF.ACCEPTANCE ACTUAL	MAX CONTINUOUS SPEC	MAX CONTINUOUS ACTUAL
SHAFT SPEED		21000.	21000.		21000.
S.L.S. STD.DAY POWER		1300.	1300.		1000.
I.T.T. (T5A TRIMMED)	DEG R	1648.	1644.		
T5D (DERIVED)	DEG R	1778.	1732.		
GAS GEN. SPEED	RPM	35800	35650.		
SFC @ 18400 BTU/LB	LB/SHP.HR			0.577	0.563

FUEL TYPE : CPW 204
TEST LHV : 18594. BTU/LB
S.G. :0.808 @ 54. DEG F
OIL TYPE : PWA 521 TYPE II
OIL CONSUMPTION : 0.0 LB/HR
OIL PRESSURE AT 32000 RPM : 108.4 PSI
@ OIL TEMPERATURE OF : 203.59 DEG F

I.T.T. TRIM BIAS : 52.0 DEG C @ 15 DEG C
TORQUE TRIM SLOPE : 1.018 %Q/%Q
TORQUE TRIM DATUM : -6.30 %Q

	SPEC	ACTUAL
ENGINE DRY WEIGHT	452.1	442.2

THE UNDERSIGNED CERTIFIES THAT THIS IS AN ACCURATE RECORD OF THE EVENTS DURING THE TEST OF SECTION PCE-KB0163.

DATE 06 MAY 2020 TEST CELL OPERATOR : 2 OAC4 9

INSPECTOR OR CERTIFIED OPERATOR : 2 OAC7 9

TEST ACCEPTED

Gilles Goudreau
E.M.T.
SERVICE CENTER PL5

Export Classification: 9E991
Date: 06 MAY 2020 Badge # 32129

Pratt & Whitney Canada
Une société de United Technologies /A United Technologies Company

Pratt & Whitney Canada Corp.
SERVICE CENTRE ST-HUBERT
7007 de la Savane
St-Hubert, Quebec,
Canada J3Y 3X7

Liste des pièces remplacées
List of Replaced Parts

Dossier qualité - Quality Record

P&WC JR3-6934-E (2012-10)

Date 2020/05/06

N° de série Serial No.	Module	Modèle Model	Bulletin de vente Sales Order No.	Client Customer
KB0163	GG	PT6C-67C	216894	ERA Helicopters LLC

N° de la pièce Part No.	Designation de la pièce Part Description	Qté Qty	Non Fact. Not Chrg.	Sub. S. Flag
EXCHANGE				
3040931CL04	COMPRESSOR-TURBINE STATOR,ASSY OF	1		
3056915-01	CASE-GAS GENERATOR,ASSY OF	1		
3059905-01	MANIFOLD-FUEL	1		
NEW				
3006505	VALVE-DRAIN,GAS GEN CASE	1		
3011071	ADAPTER-DRAIN VALVE	1		
3036777	SEAL-FACE OPTION (IC)	1		
3036777	SEAL-FACE OPTION (IC)	1		
3037278	BEARING OPTION (IC)	1		
3039001	ROTOR-COMPRESSOR	1		
3040678CL04	RING HALF-SPACER	2		
3045441-03	VALVE-CHIP DETECTOR,SELF CLOSING	1		
3045446-04	PLUG-CHIP DETECTOR,MAGNETIC	1		
3049258-02	SEAL, CARBON, NO.2 BEARING	1		
3049258-02	SEAL, CARBON, NO.2 BEARING	1		
3050129-01	GEAR-SPUR,OIL PUMP DRIVE	1		
3050161-01	HOUSING-BLOWDOWN VALVE	1		
3050524-01	RING - SEALING, TURBINE EXHAUST DUCT	2		
3050627-04	IGNITER	2		
3052782-01	SHAFT-STUB,COMPRESSOR ROTOR	1		
3052860-01	SPACER - OIL SLINGER	1		
3055418-02	ELECTRICAL WIRING HARNESS	1		
3057818-01	RING-SEALING,POWER TURBINE HOUSING	1		
3058961-01	HOSE, NON-METALLIC	1		
3059678-01	OIL FILTER ELEMENT OPTION (IC)	1		
3059784-01	SHAFT ASSY-COMPRESSOR ROTOR (IC)	1		
3070351-01	GASKET-DATA COLLECTION UNIT	1		
3070389-01	RING-SEALING,COMPRESSOR TURBINE SHRO	1		
3070391-01	RING-SEAL,COMPRESSOR TURBINE VANE	1		
3071101-01	SWITCH-TRIPLE FUEL	1		
3071842-01	SEAL-AIR,COMPRESSOR TURBINE STATOR	1		
3072287-01	SCREEN, AIR INLET, ASSY OF	1		

Pratt & Whitney Canada
Une société de United Technologies / A United Technologies Company

Pratt & Whitney Canada Corp.
SERVICE CENTRE ST-HUBERT
7007 de la Savane
St-Hubert, Quebec,
Canada J3Y 3X7

Liste des pièces remplacées
List of Replaced Parts

Dossier qualité - Quality Record

P&WC JR3-6934-E (2012-10)

Date 2020/05/06

N° de série Serial No.	Module	Modèle Model	Bulletin de vente Sales Order No.	Client Customer
KB0163	GG	PT6C-67C	216894	ERA Helicopters LLC

N° de la pièce Part No.	Designation de la pièce Part Description	Qté Qty	Non Fact. Not Chrg.	Sub. S. Flag
3072898-01	HOUSING-COMPRESSOR TURBINE SHROUD	1		
3072899CL23	SHROUD SEGMENT-COMPRESSOR TURBINE	10		
3072899CL23	SHROUD SEGMENT-COMPRESSOR TURBINE	4		
3075491-01	BLADE-COMPRESSOR TURBINE	43		
3076456-01	SEAL-PLAIN .841 X .310 X .875	3		
3076823-01	COMPRESSOR STATOR ASSEMBLY OF	1		
3078091-01	COMPRESSOR STATOR ASSEMBLY OF	1		
3078092-01	COMPRESSOR STATOR ASSEMBLY OF	1		
3078094-01	COMPRESSOR STATOR ASSEMBLY OF	1		
3079066-01	TIE ROD-CPRSR ROTOR,.375-24J X8.190	8		
3107550-01	BOLT-EXT RLV BODY,.250-28UNJF,RND	8		
3112606-01	WASHER-CUP,1.467 DIA NOM	2		
3112804-01	SPACER-IMPELLER SHROUD	1		
3115091-01	BALL-PLASTIC	1		
3118263-01	COOLER-OIL,FUEL COOLED	1		
3119800-01	NOZZLE-OIL,OPTIONAL ACC DR,ASYO	1		
3123718-01	GEARSHAFT-SPUR,PMA DRIVE	1		
3133866	BEARING-BALL,CERAMIC,FLGD	1		
AK67C-30	KIT - GAS GENERATOR (SUB)	1		
AK67C-40	KIT - COMPRESSOR (SUB)	1		
AK67C-45	KIT - COMPRESSOR (MAIN)	1		
AK67C-75	KIT - ENGINE COMPLETE (C-FLANGE)	1		
AK67C-90	KIT - CT DISC (MAIN)	1		
AK67C-95	KIT - ENGINE COMPLETE (O/H ONLY)	1		
AK67C-OVERHAUL	KIT – OVERHAUL	1		
BK-PT6C-67-KIT	KIT ASSY, CONTAINER (PT6C-67)	1		

J 2020-05-06 23:14:02 R3 2020-05-06 23:14:02 PR1 400 EX32129 opt/uniq/queue/tmp/mfd58100411120954B

Fin du document
End-of-document

Export Control Classification: This document contains no technical data.

Pratt & Whitney Canada
Une société de United Technologies / A United Technologies Company

Pratt & Whitney Canada Corp.
SERVICE CENTRE ST-HUBERT
7007 de la Savane
St-Hubert, Quebec,
Canada J3Y 3X7

Liste des pièces remplacées
List of Replaced Parts

Dossier qualité - Quality Record

P&WC JR3-6934-E (2012-10)

Date 2020/05/06

Nº de série Serial No.	Module	Modèle Model	Bulletin de vente Sales Order No.	Client Customer
KB0163	PS	PT6C-67C	216894	ERA Helicopters LLC

Nº de la pièce Part No.	Designation de la pièce Part Description	Qté Qty	Non Fact. Not Chrg.	Sub. S. Flag
EXCHANGE				
3075588-01	HOUSING-POWER TURBINE SHAFT,ASSY OF	1		
NEW				
3023059	WASHER-SLOTTED,POWER TURBINE SHAFT	1		
3029885	NUT PLAIN ROUND	1		
3045412-01	BLADE-POWER TURBINE (MACHINING)	13		
3045433-01	BLADE-POWER TURBINE (MACHINING)	5		
3045991-01	TUBE-OIL,SCAV.FRONT #3,4,5 BRG ,ASYO	1		
3050437-01	RING-RETAINING,VANE RING	1		
3050835-01	SEAL-CARBON,FACE	1		
3050841-01	RUNNER-CARBON SEAL	1		
3055410-01	HARNESS-WIRING,T5	1		
3070510-01	SHAFT-OUTPUT,ASSY OF	1		
3070557-01	PACKING-FIBER,CERAMIC .250	1		
3073649-01	WIRING HARNESS-THERMOCOUPLE	1		
3073997CL27	SPACER-TURBINE SHAFT	1		
3074009-01	HOUSING-SUPPORT,NO.5 BEARING,ASSY OF	1		
3074430-01	SHAFT-POWER TURBINE,ASSY OF	1		
3075142CL02	POWER TURBINE STATOR, ASSY OF	1		
3075669-01	SEAL-CARBON CONTROLLED GAP	1		
3077962-01	RING-CLAMPING,TURBINE VANE	1		
3133715-01	INSULATION BLANKET	1		
AK67C-25	KIT - PACKAGING	1		
AK67C-5	KIT - POWER SECTION (MAIN)	1		
ST3397-31	RING-RETAINING,5.588X.250X.072	1		

J 2020-05-06 23:14:25 R3 2020-05-06 23:14:25 PR1 400 EX32129 opt/uniq/queue/tmp/mfd58100411120954B

Fin du document
End-of-document

Export Control Classification: This document contains no technical data.

1. Autorité de l'aviation civile / Pays qui approuve le bon de sortie Approving national aviation authority **Transport Canada** **Transports Canada**	2. **BON DE SORTIE AUTORISÉE** **AUTHORIZED RELEASE CERTIFICATE** **FORM ONE**	3. N° de suivi du formulaire - Form Tracking No. **179758 PCE- KB0163 -1**
4. Nom et adresse de l'organisme - Organization Name and Address **Pratt & Whitney Canada** Une société de United Technologies /A United Technologies Company Pratt & Whitney Canada Corp SERVICE CENTER ST-HUBERT 7007 de la savane St-Hubert, Québec, Canada J3Y 3X7		5. Bon de travail/contrat/facture - Work Order/Contract/Invoi **179758 PCE- KB0163**

6. Article Item	7. Description	8. Numéro de pièce Part No	9. Qtée Qty	10. N° de série/de lot Serial/Batch No.	11. Situation/Travail Status/Work
1	**TURBOSHAFT ENGINE ASSEMBLY**	**3045379-01**	**1**	PCE- KB0163	**REPAIRED**

12. Remarques - Remarks

REPAIRED IN A/W PT6C-67C MAINTENANCE MANUAL REV. 14 AND APPROVED DATA.
REFER TO LOGBOOK FOR COMPLETE DETAILS.

" Work has been carried-out in accordance with : "
EU regulations EASA under approval No. EASA. 145.7098

ERA HELICOPTERS
R16347
DEC 10 2013
RECEIVING INSP.
102070

CURRENT SERVICE LIFE IS: TTSN: 1733.5 TTSO: N/A TCSN: N/A TCSO: N/A

13a. Le présent bon certifie que les articles indiqués ci-dessus ont été construits conformément à Certifies that the items identified above were manufactured in conformity to: ☐ Des données de conception approuvées et qu'ils peuvent être utilisés en toute sécurité Approved design data and are in condition for safe operation. ☐ Des données de conception non approuvées indiquées à la case 12. Non approved design data specified in block 12.		14a [X] RAC 571.10 (certification après maintenance) - CAR 571.10 Maintenance Realease [X] Autre réglementation precisée à la case 12 - Other regulation specidfied in block 12. Le présent bon de sortie certifie que, sauf indication contraire à la case 12, le travail indiqué à la case 11 et décrit à la case 12, à été effectué conformément au Règlement de l'aviation canadien. Certifies that, unless otherwise specified in block 12, the work identified in block 11 and describe in block 12, has been performed in compliance with the Canadian Aviation Regulations.	
13b. Signature	13 c. Numéro de l'organisme agrée Approved Organisation Number	14 b. Signature Moore	14 c. Numéro de l'organisme agrée Approved Organisation Number **AMO 20-00**
13d. Nom - Name	13 e. Date (jj/mmm/aaaa - dd/mmm/yyyy)	14 d. Nom - Name Lloyd Moore PWC AMO 20-00 AI 63	14 e. Date (jj/mmm/aaaa - dd/mmm/yyyy) DEC 03 2013

* Responsabilité du monteur

Le présent bon de sortie ne constitue pas une autorisation de montage.

Le monteur qui travaille conformément à la réglementation d'un pays autre que celui spécifié à la case 1 doit s'assurer que la réglementation en question reconnaît la certification du pays ainsi spécifié.

Les déclarations des cases 13a et 14a ne constituent pas une certification de montage. Dans tous les cas, le dossier technique de l'aéronef doit inclure une certification de montage délivrée conformément à la réglementation nationale qui s'applique, avant que l'aéronef puisse voler.

* Installer Responsabilities

This certificate does not constitute authority to install.

Installers working in accordance with the national regulations of a country other than the specified in block 1 must ensure that their regulations recognize certifications from the country specified.

Statements in block 13a or 14a do not constitute installation certification. In all cases, the technical record for the aircraft must contain an installation certification issued in accordance with the applicable national regulations before the aircraft may be flown.

P&WC 11198 (2013-01) / P&WC JR3_00552_E (2012-04)

1. Autorité de l'aviation du pays d'approbation / pays Approving national aviation authority /country	2. **BON DE SORTIE AUTORISÉE - AUTHORIZED RELEASE CERTIFICATE**	3. Numéro de suivi du formulaire - Form tracking No.
Transport Canada	**TCCA 24-0078**	SEE BLOCK 5

4. Nom et adresse de l'organisme agréé - Approved organization name and address		5. Bon de travail/contrat /facture - Work order/contract/invoice
Pratt & Whitney Canada Une societe de United Technologies/A United Technologies Company	Pratt & Whitney Canada Cie ./ Pratt & Whitney Canada Corp. 1000 Boul. Marie-Victorin Longueuil, quebec, Canada J4G 1A1	P.O. 4000325539

PCE-KB0163

6. Item	7. Description	8. N° de pièce - Part No.	9. Admissibilité - Eligibility* *	10. Qtée - Qty	11. N° de série/de lot - Serial/batch No	12. État/travail - Status/work
1	FREE TURBINE TURBOSHAFT PT6C-67C	A3045379-01	VARIOUS	1	PCE-KB0163 Includes PS-KB0163	MANUFACTURED

13. Remarques - Remarks

THIS ENGINE CONFORMS TO THE CANADIAN TYPE CERTIFICATE E-32 AND IS IN CONDITION FOR SAFE OPERATION.SEE LOGBOOK FOR THE RESTRICTIONS FROM THE CANADIAN ENGINE TYPE CERTIFICATE E-32 ISSUE 5.

14. Le présent bon certifie que les articles indiqués ci-dessus ont été construits conformément à :
Certifies that the items identified above were manufactured in conformity to:

☒ des données de conception approuvées et qu'ils peuvent être utilisés en toute sécurité
Approved design data and are in condition for safe operation.

☐ des données de conception non approuvées indiquées à la case 13.
Non Approved design data specified in block 13.

19.

☐ Certification après maintenance en vertu du RAC 571.10 - Car 571.10 Maintenance release

☐ Autre réglementation précisée à la case 13. - Other regulations specified in block 13.

Le présent bon certifie que, à moins d'indication contraire apparaissant à la case 13, le travail indiqué à la case 12 et décrit à la case 13 a été effectué conformément au RAC 571 -
Certifies that, except where otherwise specified in block 13, the work identified in block12 and described in block 13 was performed in accordance with CAR 571.

15. Signature autorisée - Authorized signature	16.N°d'agrément/d'autorisation-Certificate / Approval Ref. No.	20. Signature autorisée - Authorized signature	21. N° d'agrément/d'autorisation-Certificate/Approval Ref.No
	TC 458 NO.013		
17. Nom - Name DENIS GAUDREAU	18. Date (dd/month/yyyy) 26 MAR 2006	22. Nom - Name	23. Date (dd/mmm/yyyy)

24-0078 (12/09/2001) / P&WC 5720 (2005-03) *Le monteur doit contre-vérifier l'admissibilité avec les données approuvées - * Installer must cross-check eligibility with approved data -
1. Le présent document n'autorise aucunement le montage de la pièce. - 1. This document does not constitute authority to install the part.
2. Si le monteur se base sur la réglementation nationale d'une autorité de navigabilité autre que celle indiquée à la case 1, il doit s'assurer que l'autorité de navigabilité dont il relève accepte les produits ou les travaux de maintenance de l'autorité de navigabilité indiquée à la case 1. - 2. Where the installer works in accordance with the national regulations of an airworthiness authority other than the authority specified in block 1, the installer must ensure that his/her airworthiness authority accepts products or maintenance from the airworthiness authority specified in block 1.
3. Les énoncés des cases 14 et 19 ne constituent en aucune façon une certification du montage. Dans tous les cas, le dossier technique de l'aéronef doit renfermer une certification de montage délivrée conformément à la réglementation de l'État d'immatriculation, et ce, avant que tout vol puisse avoir lieu. - 3. Statements 14 and 19 do not constitute installation certification. In all cases the aircraft technical record must contain an installation certification, issued in accordance with the national regulations of the state of [redacted], before the aircraft may be flown.

2

PRATT & WHITNEY CANADA CORP. P68 PROGRAM 4.4.36

PT6C-67C S/N:PCE-KB0163 OVERHAUL TEST RECORD

2013 DEC 01 TEST CELL : 0112

TESTED AS PER OH MANUAL REV (09) APPLICABLE SB :

FINAL VANE FLOW AREAS FIRST STAGE : 21513 2S7 6.74

SECOND STAGE : 33333 2S2 23.20

PERFORMANCE DATA		PERF.ACCEPTANCE REP SPEC	PERF.ACCEPTANCE ACTUAL	MAX CONTINUOUS REP SPEC	MAX CONTINUOUS ACTUAL
SHAFT SPEED		21000.	21000.		21000.
S.L.S. STD.DAY POWER		1300.	1300.		1000.
I.T.T. (T5A TRIMMED)	DEG R	1652.	1645.		
T5D (DERIVED)	DEG R	1790.	1781.		
GAS GEN. SPEED	RPM	35969	35550.		
SFC @ 18400 BTU/LB	LB/SHP.HR			0.586	0.590

FUEL TYPE : CPW 204

TEST LHV : 18605. BTU/LB

S.G. :0.804 @ 54. DEG F

OIL TYPE : PWA 521 TYPE II

OIL CONSUMPTION : 0.00 LB/HR

OIL PRESSURE AT 32000 RPM : 111.7 PSI

@ OIL TEMPERATURE OF : 179.6 DEG F

I.T.T. TRIM BIAS : 87.0 DEG C @ 15 DEG C

TORQUE TRIM SLOPE : 1.021 %Q/%Q

TORQUE TRIM DATUM : -1.21 %Q

	SPEC	ACTUAL
ENGINE DRY WEIGHT	452.1	442.2

THE UNDERSIGNED CERTIFIES THAT THIS IS AN ACCURATE RECORD OF THE EVENTS DURING THE TEST OF SECTION PCE-KB0163....

DATE 02 DEC 2013 TEST CELL OPERATOR : Steve Dwyer 0 0AC9 0

INSPECTOR OR CERTIFIED OPERATOR :

TEST ACCEPTED

02 DEC 2013

Export Classification: 9E991

Date 02 DEC 2013 Badge # 33164

Eric Chabot PWC AMO 20-00 AI 25

2020 MAY06 Gilles Goudreau PWC AMO 20-00 AI 91

Refer to "OVERHAUL TEST RECORD" dated ~~2020APR03~~

CONFIDENTIAL – SUBJECT TO PROTECTIVE ORDER BRISTOW 010902

Gilles Goudreau PWC AMO 20-00 AI 91

Liste de vérifications du moteur
Engine Check List
P&WC 11501 (2013-09) Page 3

Pratt & Whitney Canada
Une société de United Technologies / A United Technologies Company

Pratt & Whitney Canada Cie. /
Pratt & Whitney Canada Corp.
1000 Marie Victorin
Longueuil, Québec

Modèle P&WC
P&WC Model: **PT6C-67C**

- Ce moteur est muni de l'équipement standard figurant dans la liste illustrée des pièces de P&WC, sauf exception mentionée sur le présent document.
- This unit is complete with standard equipment as listed in the P&WC Illustrated Parts List except as noted herein:

Livret technique - Logbook:

POWER SECTION			GAS GENERATOR SECTION		
Type	Couleur Color	Qté Qty	Type	Couleur Color	Qté Qty
CAN	YELLOW	1	CAN	YELLOW	1

Conteneur - Container

	No.Série-Serial No.	Couleur-Color				
Métal Metal: ○			Berceau Cradle		Couvercle Cover	
Bois Wood: ○			Palette Skid		Manchon Sleeve	
Carton Carboard: ○						

Bon de commande
Sales order No.: **179758**

Spécifications du client
Customer Spec.: **G-PT6 ALL**

Client
Customer: **Era Helicopters Inc.**

ENGINE ASSEMBLY, COMPLETE ENGINE ASSEMBLY, COMPLETE	No de série du module (plaque): Module Serial Number (Data Plate):	PCE- KB0163	État: Satus:	REPAIR
Nom de pièce - Part Name	N° de pièce Part Number	N° de série Serial Number	Temps total Total time:	Remarques - Remarks
Rég. électronique du moteur Electronic Engine Control Unit				NOT RECEIVED
Régulateur d'allumage Ignition Regulator (Exciter)				NOT RECEIVED
Unité de collecte de données Data Collection Unit (DCU)	32213-04	DP06-327	TSN: 1733.5	AS RECEIVED
Module de gestion du carburant Fuel Management Module (FMM)	8063-894A	15062622	TSN: 2109.9	AS RECEIVED
Alternateur magnétique (stator) Magnet Alternator (stator)	92455-1	0262PA	TSN: 1733.5	AS RECEIVED
Vanne de décharge électronique Bleed Valve Electronic	540-1920-5	XMA330	TSN: 1733.5	AS RECEIVED
Refroidisseur d'huile Oil Cooler	10845B	WA11157	TSO: 1733.5	AS RECEIVED
Réchauffeur de carburant Fuel Heater	D2967-200A	M139436		AS RECEIVED
Accumulateur - écologique Accumulator - Ecology	3050562-03	17253895		AS RECEIVED
Faisceau de câbles Wiring Harness	3055418-02	EF00184		AS RECEIVED

Remarques / Remarks

Vérifié par: (nom et timbre) - Checked In By: Name & Stamp)	Date	Vérification finale: (nom et timbre) - Final Inspection: (Name & Stamp)	Date
Guy Levesque (Stamp#WA33)	2-Dec-2013	Alain Lefebvre (Stamp#SC185)	2-Dec-2013

NA = Sans objet = Not Applicable NR = Non reçu Not Received SL = Non expédié Not Shipped TSN = Temps depuis neuf Time Since New TSO = Temps depuis révisions Time Since Overhaul

CONFIDENTIAL SUBJECT TO PROTECTIVE ORDER BRISTOW 010903

EXPORT CONTROL CLASSIFICATION, THIS DOCUMENT DOES NOT CONTAIN TECHNICAL DATA.

Pratt & Whitney Canada
Une société de United Technologies / A United Technologies Company

Pratt & Whitney Canada Corp.
SERVICE CENTRE ST-HUBERT
7007 de la Savane
St-Hubert, Quebec,
Canada J3Y 3X7

Liste des pièces remplacées
List of Replaced Parts

Dossier qualité - Quality Record

P&WC JR3-6934-E (2012-10)

Date 2013/12/03

Nº de série Serial No.	Module	Modèle Model	Bulletin de vente Sales Order No.	Client Customer
KB0163	GG	PT6C-67C	179758	Era Helicopters Inc.

Nº de la pièce Part No.	Designation de la pièce Part Description	Qté Qty	Non Fact. Not Chrg.	Sub. S. Flag
NEW				
3050524-01	RING - SEALING, TURBINE EXHAUST DUCT	1		
3057818-01	RING - SEALING, POWER TURBINE HOUSING	1		
3059779-01	FILTER ELEMENT OPTION (IC)	1		
3074845-01	VALVE ASSY-CHECK	1		
AK67C-30	KIT - GAS GENERATOR (SUB)	1		
AK67C-50	KIT - CT DISC (SUB)	1		
AK67C-75	KIT - C FLANGE	1		
AK67C-90	KIT - CT DISC (MAIN)	1		
BK-PT6C-67-KIT	KIT ASSY, CONTAINER (PT6C-67)	1		
OVERHAUL				
3075491-01	BLADE-COMPRESSOR TURBINE	43		

J 2013-12-03 08 35:39 R3 2013-12-03 08:35:39 PR1 400 BZ19498 opt/uniq/queue/tmp/mfd58100411120954B

Fin du document
End-of-document

Export Control Classification: This document contains no technical data.

Pratt & Whitney Canada
Une société de United Technologies / A United Technologies Company

Pratt & Whitney Canada Corp.
SERVICE CENTRE ST-HUBERT
7007 de la Savane
St-Hubert, Quebec,
Canada J3Y 3X7

Liste des pièces remplacées
List of Replaced Parts

Dossier qualité - Quality Record

P&WC JR3-6934-E (2012-10)

Date 2013/12/03

N° de série Serial No.	Module	Modèle Model	Bulletin de vente Sales Order No.	Client Customer
KB0163	PS	PT6C-67C	179758	Era Helicopters Inc.

N° de la pièce Part No.	Designation de la pièce Part Description	Qté Qty	Non Fact. Not Chrg.	Sub. S. Flag
NEW				
3023059	WASHER-SLTD,PWR TURB SHAFT	1		
3045433-01	BLADE-POWER TURBINE (MACHINING)	1		
3050437-01	RING-RETAINING,VANE RING	1		
3055715-01	NOZZLE-OIL,ASSY OF	1		
3070557-01	PACKING-FIBER,CERAMIC .250	1		
3073037-01	BAFFLE-POWER TURBINE HOUSING	1		
3073074-01	COVER-POWER TURBINE SHAFT HSG ASYO	1		
3073085-01	SHIELD-INSULATION, ASSEMBLY OF	1		
3073839-01	INSULATION BLANKET-PWR SECT,ASYO	1		
3073997CL25	SPACER-TURBINE SHAFT	1		
3074267-01	RUNNER-SEAL # 3 BEARING	1		
3075120-01	SEAL AIR TURBINE INTERSTAGE ROTOR	1		
3075588-01	HOUSING-POWER TURBINE SHAFT,ASSY OF	1		
3075669-01	SEAL-CARBON CONTROLLED GAP	1		
AK67C-10	KIT - No.5 BRG SUPPORT HSG (SUB)	1		
AK67C-25	KIT - PACKAGING	1		
AK67C-5	KIT - POWER SECTION (MAIN)	1		
AK67C-85	KIT - NO.5 BRG. SUPPORT HSG. (MAIN)	1		
AKBAL67C-2	KIT - 2ND STAGE TURBINE DISC (SUB)	1		
AKBAL67C-3	KIT - 3RD STAGE TURBINE DISC (SUB)	1		
AS3217-155	RING-RTNG,2.250 HSG DIA	1		
AS3217-160	RING-RTNG,2.500 HSG DIA	1		
ST3397-31	RING-RETAINING,5.588X.250X.072	1		

J 2013-12-03 08:36 28 R3 2013-12-03 08:36.28 PR1 400 BZ19498 opt/uniq/queue/tmp/mfd58100411120954B

Fin du document
End-of-document

Export Control Classification: This document contains no technical data.

PRATT & WHITNEY CANADA CORP. P68 PROGRAM 4.3.39

PT6C-67C S/N:PCE-KB0163 FINAL ACCEPTANCE TEST RECORD

2006 MAR 25 TEST CELL : 0112 BUILD SPEC.: 1019

ENGINE TESTED AND ACCEPTED IN ACCORDANCE WITH E&TI : 668

FINAL VANE FLOW AREAS FIRST STAGE : 21513 2S7 6.74

SECOND STAGE : 21513 2S2 23.41

PERFORMANCE DATA		PERF.ACCEPTANCE SPEC	PERF.ACCEPTANCE ACTUAL	MAX CONTINUOUS SPEC	MAX CONTINUOUS ACTUAL
SHAFT SPEED		21000.	21000.		21000.
S.L.S. STD.DAY POWER		1300.	1300.		1000.
I.T.T. (T5A TRIMMED)	DEG R	1648.	1640.		
T5D (DERIVED)	DEG R	1778.	1750.		
GAS GEN. SPEED	RPM	35800	35550.		
SFC @ 18400 BTU/LB	LB/SHP.HR			0.577	0.575

FUEL TYPE : CPW 204

TEST LHV : 18545. BTU/LB

S.G. :0.812 @ 58. DEG F

OIL TYPE : PWA 521 TYPE II

OIL CONSUMPTION : 0.0 LB/HR

OIL PRESSURE AT 32000 RPM : 108 PSI

@ OIL TEMPERATURE OF : 191 DEG F

I.T.T. TRIM BIAS : 58.0 DEG C @ 15 DEG C

TORQUE TRIM SLOPE : 1.020 %Q/%Q

TORQUE TRIM DATUM : 0.12 %Q

	SPEC	ACTUAL
ENGINE DRY WEIGHT	446.1	442.20

PRODUCTION SIGNATURE :

INSPECTION SIGNATURE :

GOVERNMENT INSPECTOR :

THE UNDERSIGNED CERTIFIES THAT THIS RECORD ACCURATELY SETS FORTH THE EVENTS DURING THE TEST MADE ON THE ENGINE THEREIN IDENTIFIED.

DATE 26 MAR 2006 FOREMAN,ASSY.&TEST INSP :

DENIS GAUDREAU

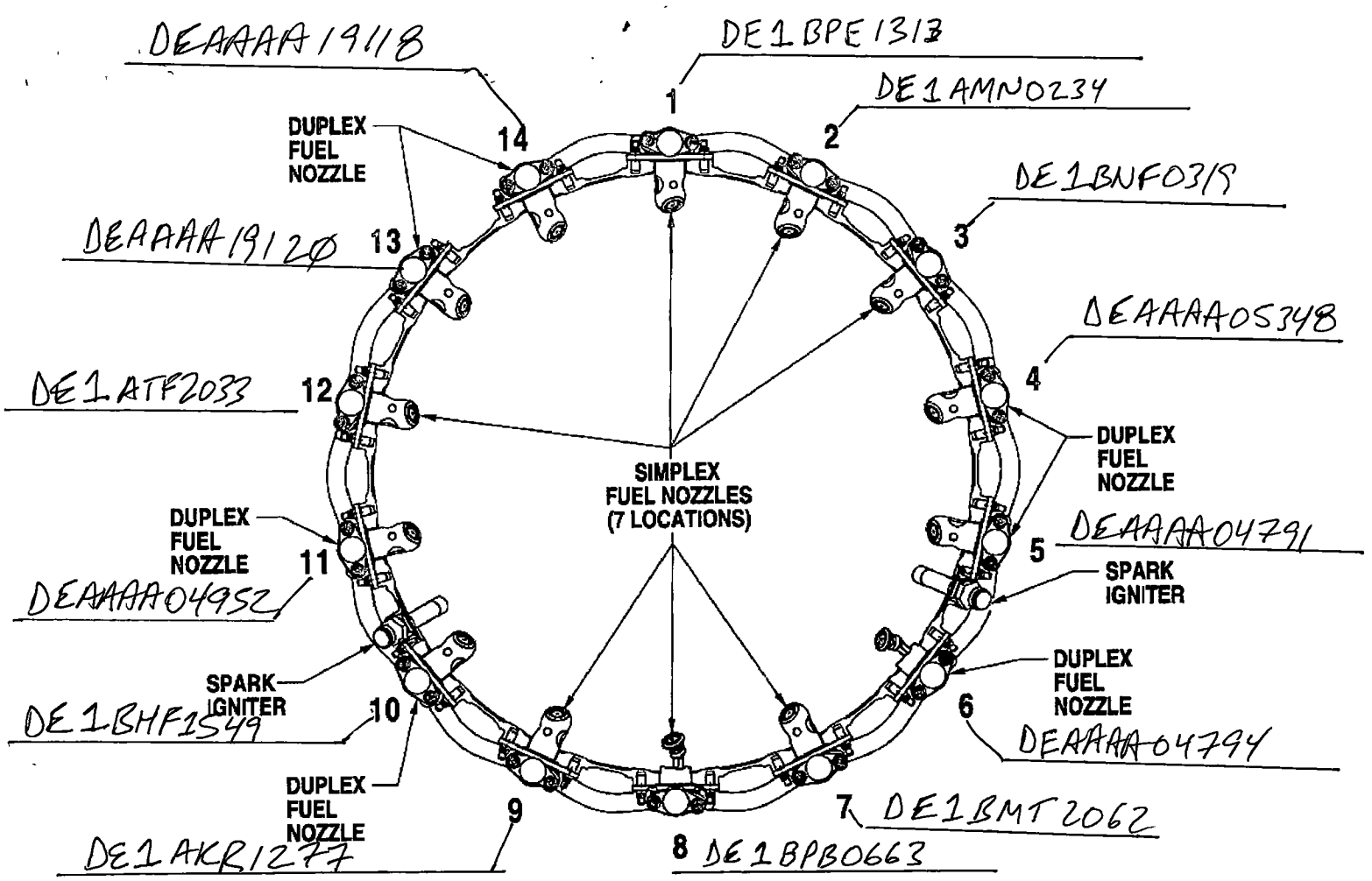
DEAAAA19118
DE1BPE1313
DE1AMN0234
DE1BNF0319
DEAAAA05348
DEAAAA04791
DE1BMT2062
DEAAAA04794
DE1BPB0663
DE1AKR1277
DEAAAA04952
DE1BHF1549
DE1ATF2033
DEAAAA19120
1
2
3
4
5
6
7
8
9
10
11
12
13
14
DUPLEX FUEL NOZZLE
SIMPLEX FUEL NOZZLES (7 LOCATIONS)
SPARK IGNITER
VIEW LOOKING TOWARDS AGB

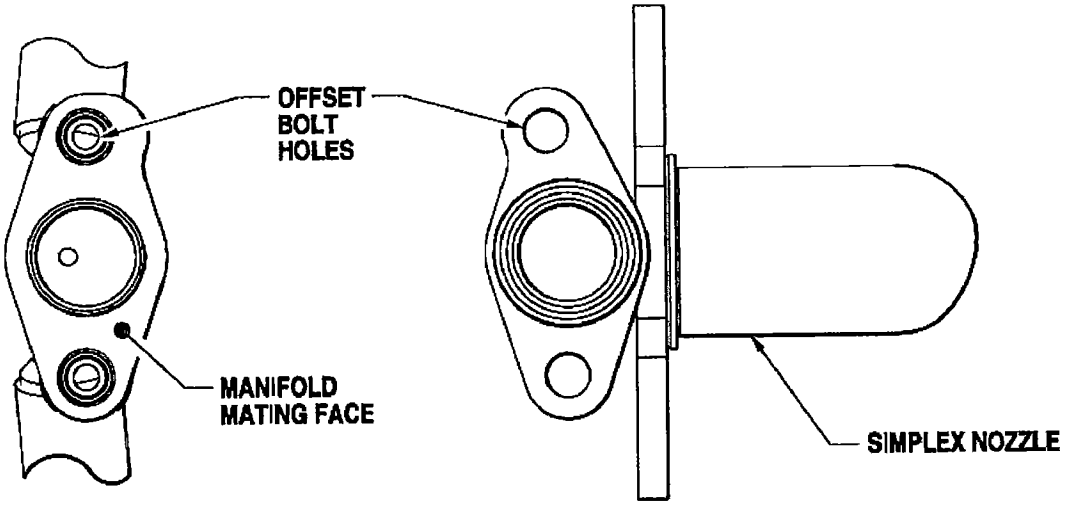
OFFSET BOLT HOLES
MANIFOLD MATING FACE
SIMPLEX NOZZLE

Figure 202 Location and Identification of Fuel Nozzle Assemblies
(SHEET 1 OF 1)

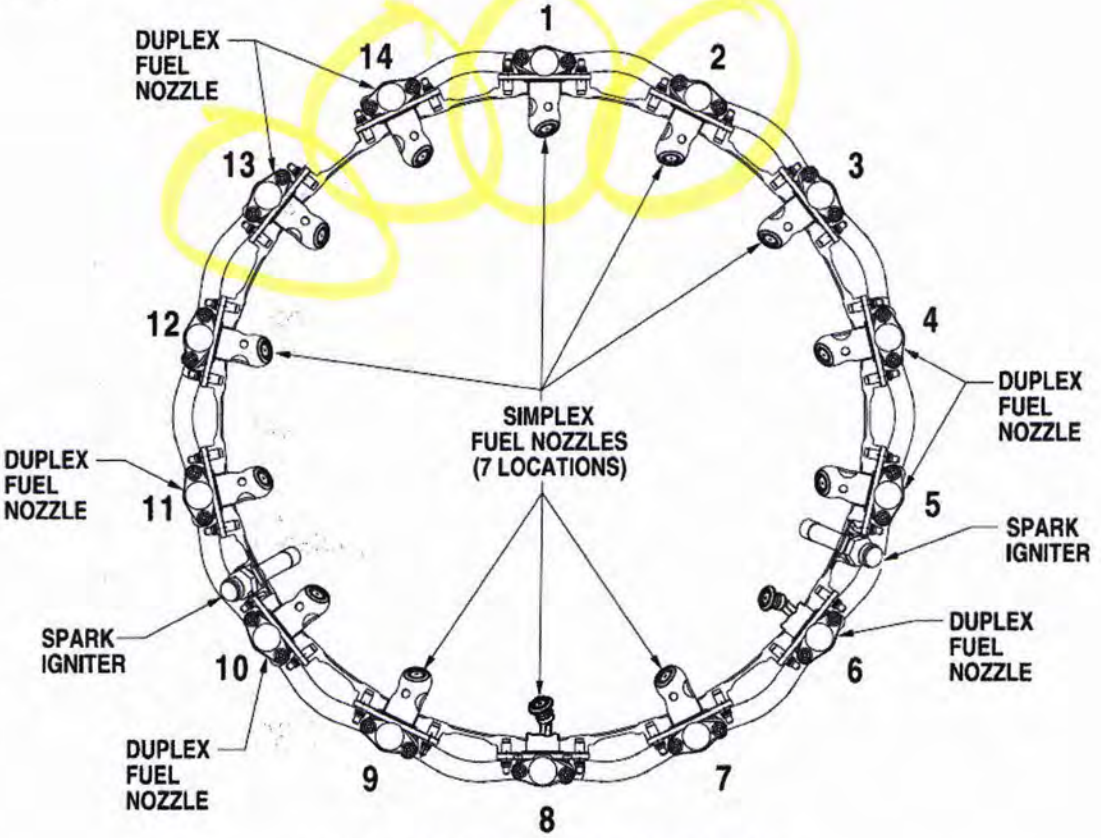

VIEW LOOKING TOWARDS AGB

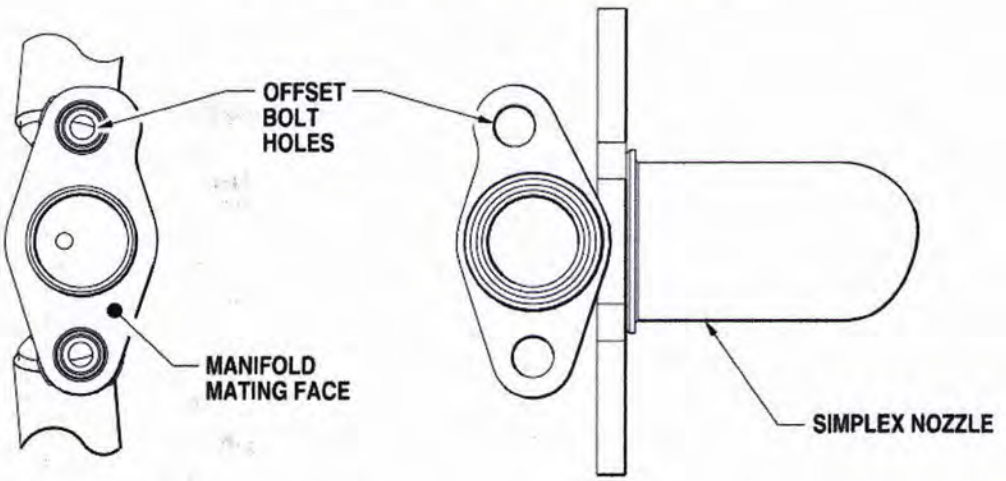

c91510a

Printed on: 29 JUN/16 P&WC Proprietary - subject to restrictions in Technical Data Agreement

APENDICE A/Appendix A

ENGINEERING ORDER// ORDEN DE INGENIERIA
LIST OF COMPONENTS //LISTADO DE COMPONENTES

Sicher
an Era Group company

FECHA DE EJECUCION/ WORK DATE	N Register: Nº Matricula	TSN ACRF:	NUMBER EO / NUMERO DE EO	MOTIVO/MOTIVE

COMPONENTE RETIRADO/COMPONENT REMOVED					COMPONENTE INSTALADO/COMPONENT INSTALLED				
DESCRIPCION DESCRIPTION	P/N	S/N	TSN	TSO	DESCRIPCION DESCRIPTION	P/N	S/N	TSN	TSO

SH-AE-03-02
Rev. 07

Pag. 1DE 1
ene-16

Agusta aerospace corporation

HISTORICAL SERVICE RECORD

NOTICE: WHEN THIS ASSY. IS RETURNED FOR ANY REASON TO AGUSTA
THIS UPDATED FORM MUST ACCOMPANY THE ITEM/COMPONENT

Page _____ of _____

NOMENCLATURE Eng Assy No.2 P/N PT6C-67C (3045314-01) S/N PCE-KB0163 INSTALLED ON AGUSTA MODEL AB139

INSTALLATION DATA						REMOVAL DATA				
DATE	INSTALLED ON A/C #	BY (ACTIVITY)	INSTALLED AT A/C HRS	COMP. HRS. SINCE NEW	COMP. HRS. SINCE O/H	DATE	REMOVED AT A/C HRS	COMP. HRS. SINCE NEW	COMP. HRS. SINCE O/H	REASON FOR REMOVAL
10 26 06	813DG	CRA	607.9							

TECHNICAL DIRECTIVES AND HISTORY OF OVERHAUL

DIRECTIVE NO. IF APPLICABLE	PRIORITY OR STATUS	DESCRIPTION	COMPLIANCE BY (ACTIVITY)	COMPLIANCE DATE	SIGNATURE
		CONFIDENTIAL – SUBJECT TO PROTECTIVE ORDER		BRISTOW	010910

AA-AST-014-E-01

LIMITED LIFE COMPONENTS INSTALLED ON ASSY

COMPONENTS DATA			INSTALLATION			REMOVAL		
PART NAME	PART NUMBER	SERIAL NUMBER	ASSY TOTAL TIME	COMPONENT LIFE		ASSY TOTAL TIME	COMPONENT LIFE	
				TOTAL TIME	TIME SINCE OH		TOTAL TIME	TIME SINCE OH

AA-AST-014-E-01

Liste de vérifications du moteur
Engine Check Out List

P&WC 11501 -3 (2019-04)

Pratt & Whitney Canada
Une société de United Technologies /A United Technologies Company

Pratt & Whitney Canada Cie. /
Pratt & Whitney Canada Corp.
1000 Marie Victorin
Longueuil, Québec

Modèle P&WC
P&WC Model: PT6C-67C

- Ce moteur est muni de l'équipement standard figurant dans la liste illustrée des pièces de P&WC, sauf exception mentionée sur le présent document.

- This unit is complete with standard equipment as listed in the P&WC Illustrated Parts List except as noted herein:

POWER SECTION			GAS GENERATOR		
TSN	TSO		TSN	TSO	
4991.9	0.0		4991.9		

Livret technique - Logbook:

POWER SECTION Type	Couleur Color	Qté Qty	GAS GENERATOR Type	Couleur Color	Qté Qty
CANADIAN	YELLOW	1	CANADIAN	YELLOW	1

Conteneur - Container

	No.Série-Serial No.	Couleur-Color
Métal Metal: ○		
Bois Wood: ○		
Carton Carboard: ◉		

Berceau Cradle	ORIGINAL	Couvercle Cover	NEW
Palette Skid	ORIGINAL	Manchon Sleeve	NEW

Bon de commande Sales order No.: 216894 — Spécifications du client Customer Spec.: G-PT6 ALL — Rev. 2.1 — Client Customer: ERA Helicopters LLC

ENGINE ASSEMBLY, COMPLETE ENGINE ASSEMBLY, COMPLETE	No de série du module (plaque): Module Serial Number (Data Plate):	PCE- KB0163	État: Satus:	OVERHAULED
Nom de pièce - Part Name	**N° de pièce Part Number**	**N° de série Serial Number**	**Temps total Total time:**	**Remarques - Remarks**
Rég. électronique du moteur Electronic Engine Control Unit				NOT RECEIVED
Régulateur d'allumage Ignition Regulator (Exciter)				NOT RECEIVED
Unité de collecte de données Data Collection Unit (DCU)	32213-04	DP06-327		VISUAL INSPECTION
Module de gestion du carburant Fuel Management Module (FMM)	8063-1089	15062622	TSO: 0.0	OVERHAULED / MODIFIED
Alternateur magnétique (stator) Magnet Alternator (stator)	92455-1	0262PA		VISUAL INSPECTION
Vanne de décharge électronique Bleed Valve Electronic	540-1920-5	2217	TSO: 0.0	OVERHAULED
Refroidisseur d'huile Oil Cooler	10845B	WA59863	TSN: 0.0	NEW
Réchauffeur de carburant Fuel Heater	D2967-200A	M139436	TSO: 0.0	OVERHAULED
Accumulateur - écologique Accumulator - Ecology	8304-005	17253895		INSPECTED / TESTED
Faisceau de câbles Wiring Harness	3055418-02	EFC02715	TSN: 0.0	NEW

Remarques / Remarks

Vérifié par: (nom et timbre) - Checked In By: Name & Stamp)	Date	Vérification finale: (nom et timbre) - Final Inspection: (Name & Stamp)	Date
PASCAL FRELAT 1103	7 MAI 2020	ANDRE COTE SC175	7 MAI 2020

NA = Sans objet = Not Applicable — NR = Non reçu Not Received — [illegible] Ship Less — [illegible] = Temps depuis neuf Time Since New — [illegible] Time Since Overhaul

CONFIDENTIAL SUBJECT TO PROTECTIVE ORDER BRISTOW 010912

EXPORT CONTROL CLASSIFICATION, THIS DOCUMENT DOES NOT CONTAIN TECHNICAL DATA.

OMB Contrc 2120-0018
09/30/2007

1. Approving National Aviation Authority/Country	2. **AUTHORIZED RELEASE CERTIFICATE** FAA Form 8130-3, AIRWORTHINESS APPROVAL TAG	3. Form Tracking Number
FAA/United States		958469-1

4. Organization Name and Address		5. Work Order, Contract, or Invoice Number
WOODWARD GOVERNOR COMPANY One Woodward Way Rockton, IL 61072 ☐ PQ202CE ☒ UU2R227L	5001 North Second Street Rockford, IL 61125 ☐ PQ202CE ☐ UU2D227L	Inv. # 3669807

6. Item	7. Description	8. Part Number	9. Eligibility *	10. Quantity	11. Serial/Batch No.	12. Status/Work
1	CONTROL - ASSY PT6C-67C FMM	8063-894	N/A	1	15062622	REPAIRED

13. Remarks Certifies that the work specified in block 12/13 was carried out in accordance with EASA Part-145 and in respect to that work the component is considered ready for release to service under EASA Part-145 Approval Number: "EASA.145.5027". See reference information in block 13, attached Certificate of Conformance, and/or repair report for maintenance records, including (as applicable); work instructions used, personnel performing the work, dates of completion, parts replaced, time and/or cycles in service (if reported), and customer purchase order number.
Last Removed From ESN KB0085
TSN- 1518

028278
ERA HELICOPTERS
JUL 23 2010
RECEIVING INSP
CR-40824

ERA 06C

14. ~~Certifies that the work identified in Block 12 was accomplished in accordance with the manufacturer data and are in a condition for safe operation~~
☐ ~~Approved design data and are in a condition for safe operation~~
☐ ~~Not approved design data specified in block 13~~

19. ☒ 14 CFR 43.9 Return to Service
☒ Other regulation specified in Block 13
Certifies that unless otherwise specified in Block 13, the work identified in Block 12 and described in Block 13 was accomplished in accordance with Title 14, Code of Federal Regulations, part 43 and in respect to that work the items are approved for return to service.

15. ~~Authorized Signature~~	16. ~~Approval/Authorization No~~	20. Authorized Signature:	21. Approval/Certificate Number
		Leonard E. Hahn 2548211	CRS#UU2R227L
17. ~~Name (Typed or Printed)~~	18. ~~Date (m/d/yy)~~	22. Name (Typed or Printed):	23. Date (m/d/y):
		Leonard E. Hahn	OCT/08/2009

User/Installer Responsibilities

It is important to understand that the existence of this document alone does not automatically constitute authority to install the part/component/assembly. Where the user/installer performs work in accordance with the national regulations of an airworthiness authority different than the airworthiness authority of the country specified in block 1, it is essential that the user/installer ensures that his/her airworthiness authority accepts parts/components/assemblies from the airworthiness authority of the country specified in block 1. Statements in blocks 14 and 19 do not constitute installation certification. In all cases, aircraft maintenance records must contain an installation certification issued in accordance with the national regulations by the user/installer before the aircraft may be flown.

FAA Form 8130-3(06-01) * Installer must cross check eligibility with applicable technical data. NSN: 0052-00-012-9005

Paperwork Reduction Act Statement: An agency may not conduct or sponsor, and a person is not required to, a collection of information unless it displays a currently valid OMB control number assosiated with this collection of information is 2120-0018. Comments concerning the accuracy of this burden and suggestions for reducing the burden should be directed to the FAA at 800 Independence Ave. SW, Washington, DC 20591, Attn: Information Collection Clearance Officer, ABA-20.

Copy

Era Helicopters LLC
a SEACOR company
600 Airport Service Road
Lake Charles LA 70605

Form M-004

SERVICEABLE

Part Description:	Part Number:	Serial Number:	Comp. ID:
MODULE, FUEL MANAGEMENT (67C)	8063-894	15062622	FCU-336

TSN:	TSO:	Next Maintenance:	Next Maintenance Due:
970.7	0	-67C FMM O/H	5000FH

Object Type:	Ref. Doc. No:	Date:	PO Number:
Tracked Component			PO245-028278-2010

****REMOVED SERVICEABLE DETAILS****

A/C Registration Number:	NHA Part Number:	NHA Serial Number:	Position Code:
Component Replacement No:	Removed By:	Removal Station:	Removal Date:
Removal Code:	Reason for Removal Remarks:		

Comments:

[X] Era Owned Part [ ] Vendor Owned Part

Date Generated: 07/23/2010

Era Helicopters LLC
a SEACOR company
600 Airport Service Road
Lake Charles LA 70605

Form M-004

SERVICEABLE

Part Description:	Part Number:	Serial Number:	Comp. ID:
MODULE, FUEL MANAGEMENT (67C)	8063-894	15062622	FCU-336

TSN:	TSO:	Next Maintenance:	Next Maintenance Due:
970.7	0	-67C FMM O/H	5000FH

Object Type :	Ref. Doc. No :	Date:	PO Number:
Tracked Component			PO245-028278-2010

****REMOVED SERVICEABLE DETAILS****

A/C Registration Number:	NHA Part Number :	NHA Serial Number:	Position Code:
Component Replacement No:	Removed By:	Removal Station:	Removal Date:
Removal Code:	Reason for Removal Remarks:		

Comments:

[X] Era Owned Part [ ] Vendor Owned Part

Date Generated: 07/23/2010

1. Autorité de l'aviation civile / Pays qui approuve le bon de sortie Approving Civil Aviation Authority / Country	2.	3. N° de suivi du formulaire - Form Tracking No.
Transports Canada **Transport Canada**	**BON DE SORTIE AUTORISÉE** **AUTHORIZED RELEASE CERTIFICATE** **FORM ONE**	8000272089/35362374
4. Nom et adress de l'organisme - Organization Name & Address **Pratt & Whitney Canada** Une société de United Technologies / A United Technologies Company Pratt & Whitney Canada Corp. SERVICE CENTRE ST-HUBERT 7007 de la Savane St-Hubert, Quebec, Canada J3Y 3X7		5. Bon de travail/contrat/facture - Work Order/Contract/Invoice 6347017 -0020

6. Article Item	7. Description	8. Numéro de pièce Part No.	9. Qtée Qty	10. N° de série/de lot Serial/Batch No.	11. Situation / Travail Status / Work
0001	MODULATING BLEED VALVE	540-1920-5	0001	2217	**OVERHAULED**

12. Remarques - Remarks

Component(s) Overhauled in accordance with:CMM:540-1920 Rev.02.
Refer to Component Condition Report Attached for Parts replaced,
Service Bulletin complied with and additional information.

"Work has been carried-out in accordance with:"
EU regulations under approval No. EASA.145.7098

TTSN 4266.4 **TTSO** 0.0

Customer P.O.: Refer to Packing Slip
Dernière Installation - Last Installation Not Supplied

13a. Le présent bon de sortie certifie que les articles indiqués ci-dessus ont été construits conformément à :
Certifies that the items identified above were manufactured in conformity to :

☐ Des données de conception approuvées et qu'ils peuvent être utillsés en toute sécurité.
Approved design data and are in condition for safe operation.

☐ Des données de conception non approuvées indiquées à la case 12.
Non approved design data specified in block 12.

13b. Signature	13c. Numéro de l'organisme agréé Approved Organization Number
13d. Nom - Name	13e. Date (JJ/MMM/AAAA - DD/MMM/YYYY)

14a. [X] RAC 571.10 (Certification après maintenance) - CAR 571.10 Maintenance Release.
[X] Autre réglementation precisée à la case 12 - Other regulation specified in block 12.

Le présent bon de sortie certifie que, sauf indication contraire à la case 12, le travail indiqué à la case 11 et décrit à la case 12, à été effectué conformément au Règlement de l'aviation canadien.
Certifies that, unless otherwise specified in block 12, the work identified in block 11 and described in block 12, has been performed in compliance with the Canadian Aviation Regulations.

14b. Signature	14c. Numéro de l'organisme agréé Approved Organization No. **AMO 20-00**
14d. Nom - Name Pierre Lauzon PWC AMO 20-00 AI 18	14e. Date (JJ/MMM/AAAA - DD/MMM/YYYY) **23/JAN/2019**

*** Responsabilités du monteur**

Le présent bon de sortie ne constitue pas une autorisation de montage.

Le monteur qui travaille conformément à la réglementation d'un pays autre que celui spécifié à la case 1 doit s'assurer que la réglementation en question reconnaît la certification du pays ainsi spécifié.

Les déclarations des cases 13a et 14a ne constituent pas une certification de montage. Dans tous les cas, le dossier technique de l'aéronef doit inclure une certification de montage délivrée conformément à la réglementation nationale qui s'applique, avant que l'aéronef puisse voler.

- Installer Responsibilities

This certificate does not constitute authority to install.

Installers working in accordance with the national regulations of a country other than that specified in block 1 must ensure that their regulations recognize certifications from the country specified.

Statements in block 13a or 14a do not constitute installation certification. In all cases, the technical record for the aircraft must contain an installation certification issued in accordance with the applicable national regulations before the aircraft may be flown.

CONFIDENTIAL – SUBJECT TO PROTECTIVE ORDER

Pratt & Whitney Canada
Une société de United Technologies /A United Technologies Company

Pratt & Whitney Canada Cie./
Pratt & Whittney Canada Cotp.
1000, Marie-Victorin
Longueuil, Quebec, Canada
J4G 1A1
450-677-9411

No. 6347017 -0020
Date 2019/01/23

P&WC JR3_0044_E (2012-10)

Relevé d'état de composants - Component Summary Condition Report

En état de livraison - As Received Condition

Numéro de certification pour suivi d'imprimé: Form Tracking Number of Certification: 8000272089/35362374

Nº de bon de commande: P&WC Sales Order No.: 6347017 -0020

Client: Customer: P&W Component Solutions Inc

Employé des ventes: Sales Employee: JOSEE DUMONT

Nº de bon de commande du Client: Customer PO Number: 4503396874

Date de creation du bon de commande client: Customer PO Creation Date: 2018/12/12

Nº de la pièce: Part Number: 540-1920-5

Description de la pièce: Part Description: MODULATING BLEED VALVE

Nº de série: Serial Number: 2217

Modèle de moteur: Engine Model:

TSN: 4266.4 **TSO:**

A.T.A: HWL75-10-33

Raison de démontage du Client: Customer Stated Reason for Removal Overhaul

Texte détaillé - Long Text:

RFR - WILL NOT RESPOND TO ADJUSTMENTS.
WORKSCOPE: OVERHAUL

Rapport des résultats - Finding Report:

Ref. Honeywell CMM 75-10-33 REV. 02.
Inc. of sb 540-1920-75-1116 due to worn o.d on adjusting stem (pre sb)

Essayé en état de réception - Tested as Received: None

Liste des pièces remplacées - List of Parts Replaced

Nouvelles pièces - New Parts

Nº de la pièce - Part Number	Description de la pièce - Part Description	Qté Qty	Raison du remplacement - Reason for Replacement
3183698-1	PLATE IDENTIFICATION	1	Service Bulletin Incorporation
540-1559-1	PLATE LOCKING	1	Worn at Contact Face
AOK540-1920	OVERHAUL KIT	1	Standard Replacement

CONFIDENTIAL – SUBJECT TO PROTECTIVE ORDER

Pratt & Whitney Canada
Une société de United Technologies /A United Technologies Company

Pratt & Whitney Canada Cie./
Pratt & Whittney Canada Corp.
1000, Marie-Victorin
Longueuil, Quebec, Canada
J4G 1A1
450-677-9411

P&WC JR3_0044_E (2012-10)

NAS1219-04E6	SCREW	2	Standard Replacement
NAS620C6L	WASHER FLAT	2	Missing as received

Pièces remise en état - Reconditioned Parts

Nº de la pièce - Part Number	Description de la pièce - Part Description	Qté Qty	Raison du remplacement - Reason for Replacement
3184906-2	STEM, ADJUSTING	1	Service Bulletin Incorporation

Liste des Bulletins de service incorporés dans cette visite - List of Service Bulletins Incorporated this Visit

Nº du document Document Number	Révision Revision	Nº du document P&WC P&WC Document No.	Description
540-1920-75-1115	00	41094	CONTAINMENT OF POPPET SEAT SCREW
540-1920-75-1116	01		IMPROVE TRIMMING OPERATION

Numéro matériel sortant Outgoing Material Number 540-1920-5

Numéro de P&WC matériel sortant Outgoing P&WC Material Number 3056442-05

Retour des pièces inutilisable au client - Return Unserviceable Parts to Customer

Retour des pièces inutilisable au client: Return Unserviceable Parts to Customer: Yes

Date de la disposition des pièces inutilisable par P&WC: Date of Unserviceable Part Disposition by P&WC:

Approbation - Approval: AB 18 PIERRE LAUZON

J 2019-01-23 23.51:07 R3 2019/01/23 23:51:07 PR1 400 BZ18891 /opt/uniq/queue/tmp/mfd58100529143256B

Fin - End-of-document

Liste des composants moteur à numéros de série
Engine Serialized Component Summary

Pratt & Whitney Canada
Une société de United Technologies / A United Technologies Company

Pratt & W. , Canada Cie. /
Pratt & Whitney Canada Corp.
1000, Marie-Victorin
Longueuil, Québec, Canada
J4G 1A1
450-677-9411

P&WC JR3-6830-E (O5-1998)

Modèle / Model	PT6C-67C	N° de série / Serial No.	PCE-KB0163	Caract. de montage / Build Spec NO.	BS1019

N° du matériel / Material Number	Désignation du matériel / Material Name	N° de série / Serial No.	Code de trait. thermique / Heat Code	N° de série du matériel forgé / Forging Serial No.	N° de lot pour trait. thermique / Heat Treat Batch No.	N° de matériel du fournisseur / Vendor Material No.
3038627	ROTOR ACS. GENERATOR	2024				
3039001	ROTOR-COMPRESSOR	EAAA000P568	EPEAB	117		
3039313	SENSOR OIL PRESSURE	KL06014966				
3040931CL04	COMPRESSOR - TURBINE STATOR, ASSY OF	NB11471				
3040933	ROTOR COMPRESSOR	EAAA000P879	EPECL	81		
3040944	ROTOR - COMPRESSOR	EAAA000P010	KAVRP	006		
3040952	ROTOR-COMPRESSOR	EAAA000H972	EPECL	74		
3043905-01	COUPLING-COMPRESSOR,REAR,HUB	PKAAA019027				
3043937-03	EXCITER-IGNITION	CL060355				
3043941-03	SENSOR-TORQUE,NPT	CH1374				
		CH1376				
3044132-03	HEATER-FUEL	M165569				
3045407-01	DISC - TURBINE	A001Y5HN	EPECO	40		
3045412-01	BLADE-POWER TURBINE (MACHINING)	HML99483				
		HML99530				
		HML99536				
		HML99545				
		HML99547				
		HML99551				
		HML99552				
		HML99553				
		HML99559				
		HML99575				
		HML99581				
		HML99590				
		HML99601				
		HML99611				
		HML99615				
		HML99632				
		HMM00973				
		HMM01172				
		HMM01173				
		HMM01179				
		HMM01188				
		HMM01192				
		HMM01202				
		HMM01233				
		HMM01242				
		HMM01265				
		HMM01487				
		HMM01503				

Cont'd

Liste des composants moteur à numéros de série
Engine Serialized Component Summary

Pratt & Whitney Canada
Une société de United Technologies/A United Technologies Company

Pratt & W. Canada Cie. /
Pratt & Whitney Canada Corp.
1000, Marie-Victorin
Longueuil, Québec, Canada
J4G 1A1
450-677-9411

P&WC JR3-6830-E (05-1998)

Modèle / Model	N° de série / Serial No.	Caract. de montage / Build Spec NO.
PT6C-67C	PCE-KB0163	BS1019

N° du matériel / Material Number	Désignation du matériel / Material Name	N° de série / Serial No.	Code de trait. thermique / Heat Code	N° de série du matériel forgé / Forging Serial No.	N° de lot pour trait. thermique / Heat Treat Batch No.	N° de matériel du fournisseur / Vendor Material No.
3045433-01	BLADE-POWER TURBINE (MACHINING)	HMM01507				
		HMM01509				
		HMM01510				
		HMM01522				
		HMM04199				
		HMM04212				
		HMM04377				
		HMM04441				
		HMM04442				
		HMM10745				
		HMM10748				
		HMM10759				
		HMM10760				
		HMM10769				
		HMM10784				
		HMM10800				
		HMM21674				
		HMM21679				
		HMM21680				
		HMM21685				
		HMM21697				
		HMM21719				
		HMM21720				
		HMM21728				
		HMM21731				
		HMM21740				
		HMM21748				
		HMM21753				
		HMM21754				
		HMM21755				
		HMM21763				
		HMM21768				
		HMM23277				
		HMM23290				
		HMM23292				
		HMM23294				
		HMM23299				
		HMM23341				
		HMM30521				
		HMM30912				
		HMM30934				

Cont'd

Pratt & Whitney Canada
Une société de United Technologies /A United Technologies Company

Pratt & W. , Canada Cie. /
Pratt & Whitney Canada Corp.
1000, Marie-Victorin
Longueuil, Québec, Canada
J4G 1A1
450-677-9411

Liste des composants moteur à numéros de série
Engine Serialized Component Summary

P&WC JR3-6830-E (O5-1998)

Modèle / Model	PT6C-67C	N° de série / Serial No.	PCE-KB0163	Caract. de montage / Build Spec NO.	BS1019

N° du matériel / Material Number	Désignation du matériel / Material Name	N° de série / Serial No.	Code de trait. thermique / Heat Code	N° de série du matériel forgé / Forging Serial No.	N° de lot pour trait. thermique / Heat Treat Batch No.	N° de matériel du fournisseur / Vendor Material No.
		HMM31361				
		HMM31364				
		HMM31368				
		HMM31377				
		HMM32072				
		HMM32073				
		HMM32510				
		HMM32515				
		HMM32524				
		HMM32529				
		HMM32565				
		HMM32567				
		HMM32572				
		HMM32588				
		HMM33945				
		HMM33956				
		HMM33997				
		HMM34726				
		HMM34734				
~~3048676-06~~	~~FUEL MANAGEMENT MODULE~~	~~14633240~~				
3048823-01	LINER ASSY - COMBUSTION CHAMBER, INNER	A001XYTN				
3049261-03	IRING-HARNESS,T1 SENSOR	EM85079				
3049471-02	SWITCH-FUEL,IMPENDING BYP.AND TEMP.	HE0188				
3050165-01	INDICATOR-OIL FLTR,IMP,BY-PASS	AM0320				
3050198-03	SWITCH-OIL,(MOT & LOPS)	HE0240				
3050543-01	BEARING - ROLLER, 1.5742 X 2.67, FLANGED	BB0044964				
3050562-01	ACCUMULATOR-ECOLOGY SYSTEM	14594560				
3050721-03	SENSOR-SPEED,NG	CH1224				
3050790-01	LINER ASSY - COMBUSTION CHAMBER, OUTER	A001XYD9				
3050840-01	BEARING-BALL,2.1654X3.7402X.9515,FLG	FAA0606654				
3050874-01	GEARSHAFT - STARTER GENERATOR DRIVE	PKAAA017766				
3050875-01	GEARSHAFT-SPUR,ACCESSORY DR,OPT	PKAAA012627				
3050876-01	GEARSHAFT-SPUR,FMU DRIVE	PKAAA022202				
3052782-01	SHAFT - STUB,COMPRESSOR ROTOR	RWA25A161				
3053496-01	DISC-COMPRESSOR TURBINE	A001Y47T	EPECW	39		
3054380-01	SHAFT-STUB,COMPRESSOR ROTOR	PKAAA019011	EPDZW	171		
3054717-01	STATOR-ALTERNATING CUR,GENERATING	0262PA				
3054849-01	SHAFT-POWER TURBINE,ASSY OF	RWA31A835				
3054962CL02	VANE RING-POWER TURBINE	NB11162				
3055309-01	IMPELLER - CENTRIFUGAL	EAAA000N996	PZBOV	096		
3055410-01	HARNESS - WIRING, T5	EM85984				

Cont'd

Liste des composants moteur à numéros de série
Engine Serialized Component Summary

P&WC JR3-6830-E (O5-1998)

Pratt & Whitney Canada
Une société de United Technologies / A United Technologies Company

Pratt & W. , Canada Cie. /
Pratt & Whitney Canada Corp.
1000, Marie-Victorin
Longueuil, Québec, Canada
J4G 1A1
450-677-9411

XMA330

Modèle / Model	PT6C-67C	N° de série / Serial No.	PCE-KB0163	Caract. de montage / Build Spec NO.	BS1019

N° du matériel / Material Number	Désignation du matériel / Material Name	N° de série / Serial No.	Code de trait. thermique / Heat Code	N° de série du matériel forgé / Forging Serial No.	N° de lot pour trait. thermique / Heat Treat Batch No.	N° de matériel du fournisseur / Vendor Material No.
3055418-02	WIRING HARNESS - ELECTRICAL	EF00184				
3055992-01	RUNNER-SEAL,NO.3 BEARING	PPAA000A132				
3056052-01	BEARING - ROLLER, 1.5747 X 2.6770 X .588	FAA0607684				
3056442-05	VALVE - BLEED, ELECTRONIC	XMA330 - Rmvd @ Engine TT 4535.90 making power issues				
3056915-01	CASE-GAS GENERATOR,ASSY OF	RWA26A761				
3057389-01	HOUSING ASSY - NO. 5 BEARING, SUPPORT	NYAA000A234				
3057693CL01	VANE RING-POWER TURBINE	NB10686				
3058015-01	DISC - POWER TURBINE	A001Y0C9	PZBTB	054		
3058617-01	NOZZLE-FUEL ADAPTER AND STEM	~~DE1AKE0566~~				
		~~DE1AKE1771~~				
		~~DE1AKK1130~~				
		~~DE1AKK1136~~				
		~~DE1AKK1137~~				
		~~DE1AKK1140~~				
		~~DE1AKK1141~~				
		removed on 07/20/13 Off Eng. Assy. Off N813dg L/S#1 08/15/80				
3058991-01	BLADE-COMPRESSOR TURBINE	HMM51797				
		HMM57228				
		HMM57235				
		HMM62288				
		HMM62294				
		HMM62296				
		HMM62297				
		HMM62312				
		HMM62318				
		HMM62322				
		HMM62324				
		HMM62340				
		HMM62380				
		HMM62385				
		HMM62386				
		HMM62388				
		HMM62390				
		HMM62397				
		HMM62401				
		HMM62402				
		HMM62406				
		HMM62415				
		HMM62418				
		HMM62423				
		HMM62457				
		HMM62460				

Cont'd

Liste des composants moteur à numéros de série
Engine Serialized Component Summary

P&WC JR3-6830-E (05-1998)

Pratt & Whitney Canada
Une société de United Technologies/A United Technologies Company

Pratt & W. , Canada Cie. /
Pratt & Whitney Canada Corp.
1000, Marie-Victorin
Longueuil, Québec, Canada
J4G 1A1
450-677-9411

DP06-327

Modèle / Model	PT6C-67C	N° de série / Serial No.	PCE-KB0163	Caract. de montage / Build Spec NO.	BS1019

N° du matériel / Material Number	Désignation du matériel / Material Name	N° de série / Serial No.	Code de trait. thermique / Heat Code	N° de série du matériel forgé / Forging Serial No.	N° de lot pour trait. thermique / Heat Treat Batch No.	N° de matériel du fournisseur / Vendor Material No.
		HMM62481				
		HMM62484				
		HMM62485				
		HMM62490				
		HMM62492				
		HMM62507				
		HMM62509				
		HMM62519				
		HMM62523				
		HMM62528				
		HMM62532				
		HMM62534				
		HMM62561				
		HMM66854				
		HMM66857				
		HMM66872				
		HMM66874				
3059005-01	HOUSING-POWER TURBINE STATOR,ASYO	A001A275				
3059027-01	WIRING HARNESS - THERMOCOUPLE	EM85938				
3059071-05	CONTROL - ENGINE ELECTRONIC	06016883	TRANSFERRED RECORDS TO AIRFRAME HALO CARD BOOK			
3059126-01	NOZZLE-FUEL,SIMPLEX AND DIVIDER	~~DE1AKE0737~~				
		~~DE1AKH1124~~				
		~~DE1AKH1126~~				
		~~DE1AKH1127~~	removed off Eng Assy on 07/20/2013 off N813dg 4JA 081518 ∴ DQ.			
		~~DE1AKH1129~~				
		~~DE1AKH1130~~				
		~~DE1AKH1131~~				
3059179-02	DATA COLLECTION UNIT	DP06-327				
3059419-01	HOUSING-POWER TURBINE SHAFT,ASSY OF	LPA01180				
3070298-01	SHAFT-OUTPUT	RWA24A331				
3070489-01	DUCT TURBINE EXHAUST,SGL PORT,ASYO	DMAA000A128				
3107845-01	BEARING-RLLR CLNDRCL FLANGED,OPTION	FCN160817				
3112368-01	BEARING-ROLLER FLANGED,.94X1.65X.47	FAA0606550				
		FAA0606554				
		FAA0606555				
		FAA0606556				
		FAA0606557				
		FAA0606559				
		FAA0606560				
		FAA0606561				
		FAA0606562				

Cont'd

Liste des composants moteur à numéros de série
Engine Serialized Component Summary

Pratt & Whitney Canada
Une société de United Technologies / A United Technologies Company

Pratt & W. Canada Cie /
Pratt & Whitney Canada Corp.
1000, Marie-Victorin
Longueuil, Québec, Canada
J4G 1A1
450-677-9411

P&WC JR3-6830-E (O5-1998)

Modèle / Model	PT6C-67C	N° de série / Serial No.	PCE-KB0163	Caract. de montage / Build Spec NO.	BS1019

N° du matériel / Material Number	Désignation du matériel / Material Name	N° de série / Serial No.	Code de trait. thermique / Heat Code	N° de série du matériel forgé / Forging Serial No.	N° de lot pour trait. thermique / Heat Treat Batch No.	N° de matériel du fournisseur / Vendor Material No.
3113589-01	BEARING-BALL,1.450X3.600X1.000	FAA0606563				
~~3118263-01~~	~~OIL COOLER~~	FAA0602099 ~~WA23342~~	REMOVED			

Apprové par / Approved By	DENIS GAUDREAU	Date	2006.03.26

Historique des pièces à durée de vie limitée
Life Limited Parts History Record

Pratt & Whitney Canada
Une société de United Technologies / A United Technologies Company

Pratt & Whitney Canada Corp.
SERVICE CENTRE ST-HUBERT
7007 de la Savane
St-Hubert, Quebec,
Canada J3Y 3X7

P&WC JR3-6904-E (2012-10)

Centre de revision
Service Center

Désignation de la pièce Part Name	Code de traitement thermique Heat Code	Émis le (A-M-J) Issue Date (Y-M-D)	N° de bulletin de vente Sales Order No.	Service
ROTOR-COMPRESSOR	EPYAL	2020-03-31	216894	Overhaul

Numéro du matériel Material Number	N° de série du matériel Material Serial No.	N° de série du mat'l. forgé Forging Mat'l. Serial No.	Temps depuis neuf Time Since New	Cycles depuis neuf Cycles Since New	Manuel & Révision / Manual & Revision
3039001	FRAEPYAL78	78	0.0	0	MAINT. MANUAL 3045332 REV. 23

Timbre du vérificateur
Inspection Stamp
SC 142

Données sur le moteur / module - Engine / Module Data					Données sur le matériel - Material Data					
Temps depuis neuf à l'installation du matériel Engine/Module TSN When Material Installed	Cycles depuis neuf à l'installation du matériel Engine/Module CSN When Material Installed	N° de série du moteur / module Engine / Module Serial No.	Modèle Model	Temps depuis neuf à l'enlèvement du matériel Eng / Module TSN When Material Removed	Cumul. de cette installation Accumulated This Installation		Cumul. jusqu'à présent Total Accumulated To Date		Date	Observations (Installation d'entretien, de révision, bon de travail et timbre du vérificateur) Référence Remarks (Maintenance/Overhaul, Facility, Work Order & Inspection Stamp) Reference
					Temps Time	Cycles	Temps Time	Cycles		
4991.9		KB0163	PT6C-67C							

Nota : Pour connaître les durées de vie accumulée et résiduelle du matériel, consulter le Manuel d'entretien du moteur ou le Bulletin de service approprié, selon le cas.

Note: For determination of accumulated and remaining lives on this material, refer to the engine Maintenance Manual or Service Bulletin, as applicable.

Insérer le présent historique dans le livre du moteur ou du module où la pièce est installée. - This record must be kept with the engine/module logbook where this part is installed.

Export Control Classification: This document contains no technical data.

CONFIDENTIAL – SUBJECT TO PROTECTIVE ORDER

Historique des pièces à durée de vie limitée
Life Limited Parts History Record

Pratt & Whitney Canada
Une société de United Technologies / A United Technologies Company

Pratt & Whitney Canada Corp.
SERVICE CENTRE ST-HUBERT
7007 de la Savane
St-Hubert, Quebec,
Canada J3Y 3X7

P&WC JR3-6904-E (2012-10)

Centre de revision
Service Center

Désignation de la pièce / Part Name	Code de traitement thermique / Heat Code	Émis le (A-M-J) / Issue Date (Y-M-D)	Nº de bulletin de vente / Sales Order No.	Service
ROTOR, COMPRESSOR	EPECL	2020-03-31	216894	Overhaul

Numéro du matériel / Material Number	Nº de série du matériel / Material Serial No.	Nº de série du mat'l. forgé / Forging Mat'l. Serial No.	Temps depuis neuf / Time Since New	Cycles depuis neuf / Cycles Since New	Manuel & Révision / Manual & Revision
3040933	EAAA000P879	81	4991.9	4246	MAINT. MANUAL 3045332 REV. 23

Timbre du vérificateur / Inspection Stamp: SC 142

Données sur le moteur / module - Engine / Module Data					Données sur le matériel - Material Data					
Temps depuis neuf à l'installation du matériel / Engine/Module TSN When Material Installed	Cycles depuis neuf à l'installation du matériel / Engine/Module CSN When Material Installed	Nº de série du moteur / module / Engine / Module Serial No.	Modèle / Model	Temps depuis neuf à l'enlèvement du matériel / Eng / Module TSN When Material Removed	Cumul. de cette installation / Accumulated This Installation		Cumul. jusqu'à présent / Total Accumulated To Date		Date	Observations (Installation d'entretien, de révision, bon de travail et timbre du vérificateur) Référence / Remarks (Maintenance/Overhaul, Facility, Work Order & Inspection Stamp) Reference
					Temps Time	Cycles	Temps Time	Cycles		
4991.9		KB0163	PT6C-67C							

Nota : Pour connaître les durées de vie accumulée et résiduelle du matériel, consulter le Manuel d'entretien du moteur ou le Bulletin de service approprié, selon le cas.

Note: For determination of accumulated and remaining lives on this material, refer to the engine Maintenance Manual or Service Bulletin, as applicable.

Insérer le présent historique dans le livre du moteur ou du module où la pièce est installée. - This record must be kept with the engine/module logbook where this part is installed.

Export Control Classification: This document contains no technical data.

CONFIDENTIAL – SUBJECT TO PROTECTIVE ORDER

Historique du matériel à durée de vie limitée
Life Limited Material History Record

Numéro du dessin ST3582-01 - Drawing Number ST3582-01

Pratt & Whitney Canada
Une société de United Technologies / A United Technologies Company

Pratt & Whitney Canada Cie. /
Pratt & Whitney Canada Corp.
1000, Marie-Victorin
Longueuil, Québec
Canada J4G 1A1

P&WC JR3-6834-E [6834] (1998-06)

Désignation du matériel / Material Name	Code de traitement thermique / Heat Code	Émis le (A-M-J) / Issue Date (Y-M-D)
ROTOR COMPRESSOR	EPECL	2006.03.26

Numéro du matériel / Material Number	Numéro de série du matériel / Material Serial Number	N° de série du mat'l. forgé / Forging Mat'l. Serial No.	Temps de fonction. / Time Since New	Cycles de fonction. / Cycles Since New
3040933	EAAA000P879	81	0	0

Nota : Pour connaître les durées de vie accumulée et résiduelle du matériel, consulter le Manuel d'entretien du moteur ou le Bulletin de service approprié, selon le cas.

Note: For determination of accumulated and remaining lives on this material, refer to the engine Maintenance Manual or Service Bulletin, as applicable.

Données sur le moteur / module - Engine / Module Data				Données sur le matériel - Material Data					
Temps de fonctionnement depuis l'installation du matériel Engine/Module TSN When Material Installed	Numéro de série du moteur / module Engine / Module Serial Number	Modèle Model	Temps de fonctionnement depuis l'enlèvement du matériel Eng / Module TSN When Material Removed	Cumul. de cette installation Accumulated This Installation		Cumul. jusqu'à présent Total Accumulated To Date		Date (A-M-J) (Y-M-D)	Observations (Installation d'entretien, de révision, bon de travail et timbre du vérificateur) Remarks (Maintenance/Overhaul, Facility, Work Order & inspection stamp)
				Temps - Time	Cycles	Temps - Time	Cycles		
0	PCE-KB0163	PT6C-67C	0	ENTERED IN ERROR			T.C. 4-58 NO. 061		

REFER TO NEW CARD DATED: 31 MAR 2020

CONFIDENTIAL – SUBJECT TO PROTECTIVE ORDER

Insérer le présent historique dans le livre du moteur ou du module où la pièce est installée. - This record must be kept with the engine/module logbook where this part is installed.

Historique des pièces à durée de vie limitée
Life Limited Parts History Record

Pratt & Whitney Canada
Une société de United Technologies / A United Technologies Company

Pratt & Whitney Canada Corp.
SERVICE CENTRE ST-HUBERT
7007 de la Savane
St-Hubert, Quebec,
Canada J3Y 3X7

P&WC JR3-6904-E (2012-10)

Centre de revision
Service Center

Désignation de la pièce Part Name	Code de traitement thermique Heat Code	Émis le (A-M-J) Issue Date (Y-M-D)	N° de bulletin de vente Sales Order No.	Service
ROTOR-COMPRESSOR	KAVRP	2020-03-31	216894	Overhaul

Numéro du matériel Material Number	N° de série du matériel Material Serial No.	N° de série du mat'l. forgé Forging Mat'l. Serial No.	Temps depuis neuf Time Since New	Cycles depuis neuf Cycles Since New	Manuel & Révision / Manual & Revision
3040944	EAAA000P010	006	4991.9	4246	MAINT. MANUAL 3045332 REV. 23

Timbre du vérificateur
Inspection Stamp
SC 142

Données sur le moteur / module - Engine / Module Data					Données sur le matériel - Material Data					
Temps depuis neuf à l'installation du matériel Engine/Module TSN When Material Installed	Cycles depuis neuf à l'installation du matériel Engine/Module CSN When Material Installed	N° de série du moteur / module Engine / Module Serial No.	Modèle Model	Temps depuis neuf à l'enlèvement du matériel Eng / Module TSN When Material Removed	Cumul. de cette installation Accumulated This Installation		Cumul. jusqu'à présent Total Accumulated To Date		Date	Observations (Installation d'entretien, de révision, bon de travail et timbre du vérificateur) Référence Remarks (Maintenance/Overhaul, Facility, Work Order & Inspection Stamp) Reference
					Temps Time	Cycles	Temps Time	Cycles		
4991.9		KB0163	PT6C-67C							

Nota : Pour connaître les durées de vie accumulée et résiduelle du matériel, consulter le Manuel d'entretien du moteur ou le Bulletin de service approprié, selon le cas.

Note: For determination of accumulated and remaining lives on this material, refer to the engine Maintenance Manual or Service Bulletin, as applicable.

Insérer le présent historique dans le livre du moteur ou du module où la pièce est installée. - This record must be kept with the engine/module logbook where this part is installed.

Export Control Classification: This document contains no technical data.

CONFIDENTIAL – SUBJECT TO PROTECTIVE ORDER

Historique du matériel à durée de vie limitée
Life Limited Material History Record

Numéro du dessin ST3582-01 - Drawing Number ST3582-01

Pratt & Whitney Canada
Une société de United Technologies / A United Technologies Company

Pratt & Whitney Canada Cie. /
Pratt & Whitney Canada Corp.
1000, Marie-Victorin
Longueuil, Québec
Canada J4G 1A1

EAAA000P010

P&WC JR3-6834-E [6834] (1998-06)

Désignation du matériel / Material Name	Code de traitement thermique / Heat Code	Émis le (A-M-J) / Issue Date (Y-M-D)
ROTOR - COMPRESSOR	KAVRP	2006.03.26

Numéro du matériel / Material Number	Numéro de série du matériel / Material Serial Number	N° de série du mat'l. forgé / Forging Mat'l. Serial No.	Temps de fonction. / Time Since New	Cycles de fonction. / Cycles Since New
3040944	EAAA000P010	006	0	0

Nota : Pour connaître les durées de vie accumulée et résiduelle du matériel, consulter le Manuel d'entretien du moteur ou le Bulletin de service approprié, selon le cas.

Note: For determination of accumulated and remaining lives on this material, refer to the engine Maintenance Manual or Service Bulletin, as applicable.

Données sur le moteur / module - Engine / Module Data				Données sur le matériel - Material Data					
Temps de fonctionnement depuis l'installation du matériel Engine/Module TSN When Material Installed	Numéro de série du moteur / module Engine / Module Serial Number	Modèle Model	Temps de fonctionnement depuis l'enlèvement du matériel Eng / Module TSN When Material Removed	Cumul. de cette installation Accumulated This Installation		Cumul. jusqu'à présent Total Accumulated To Date		Date (A-M-J) (Y-M-D)	Observations (Installation d'entretien, de révision, bon de travail et timbre du vérificateur) Remarks (Maintenance/Overhaul, Facility, Work Order & inspection stamp)
				Temps - Time	Cycles	Temps - Time	Cycles		
0	PCE-KB0163	PT6C-67C	ENTERED IN ERROR				T.C. 4-56 NO. 061		

31 MAR 2020

REFER TO NEW CARD DATED:

CONFIDENTIAL – SUBJECT TO PROTECTIVE ORDER

Insérer le présent historique dans le livre du moteur ou du module où la pièce est installée. - This record must be kept with the engine/module logbook where this part is installed.

Historique des pièces à durée de vie limitée
Life Limited Parts History Record

Pratt & Whitney Canada
Une société de United Technologies / A United Technologies Company

Pratt & Whitney Canada Corp.
SERVICE CENTRE ST-HUBERT
7007 de la Savane
St-Hubert, Quebec,
Canada J3Y 3X7

P&WC JR3-6904-E (2012-10)

Centre de revision
Service Center

Désignation de la pièce / Part Name	Code de traitement thermique / Heat Code	Émis le (A-M-J) / Issue Date (Y-M-D)	N° de bulletin de vente / Sales Order No.	Service
ROTOR-COMPRESSOR	EPECL	2020-03-31	216894	Overhaul

Numéro du matériel / Material Number	N° de série du matériel / Material Serial No.	N° de série du mat'l. forgé / Forging Mat'l. Serial No.	Temps depuis neuf / Time Since New	Cycles depuis neuf / Cycles Since New	Manuel & Révision / Manual & Revision
3040952	EAAA000H972	74	4991.9	4246	MAINT. MANUAL 3045332 REV. 23

Timbre du vérificateur / Inspection Stamp: SC 142

Données sur le moteur / module - Engine / Module Data					Données sur le matériel - Material Data					
Temps depuis neuf à l'installation du matériel / Engine/Module TSN When Material Installed	Cycles depuis neuf à l'installation du matériel / Engine/Module CSN When Material Installed	N° de série du moteur / module / Engine / Module Serial No.	Modèle / Model	Temps depuis neuf à l'enlèvement du matériel / Eng / Module TSN When Material Removed	Cumul. de cette installation / Accumulated This Installation		Cumul. jusqu'à présent / Total Accumulated To Date		Date	Observations (Installation d'entretien, de révision, bon de travail et timbre du vérificateur) Référence / Remarks (Maintenance/Overhaul, Facility, Work Order & Inspection Stamp) Reference
					Temps Time	Cycles	Temps Time	Cycles		
4991.9		KB0163	PT6C-67C							

Nota : Pour connaître les durées de vie accumulée et résiduelle du matériel, consulter le Manuel d'entretien du moteur ou le Bulletin de service approprié, selon le cas.

Note: For determination of accumulated and remaining lives on this material, refer to the engine Maintenance Manual or Service Bulletin, as applicable.

Insérer le présent historique dans le livre du moteur ou du module où la pièce est installée. - This record must be kept with the engine/module logbook where this part is installed.

Export Control Classification: This document contains no technical data.

CONFIDENTIAL – SUBJECT TO PROTECTIVE ORDER

Historique du matériel à durée de vie limitée
Life Limited Material History Record

Numéro du dessin ST3582-01 - Drawing Number ST3582-01

Pratt & Whitney Canada
Une société de United Technologies / A United Technologies Company

Pratt & Whitney Canada Cie. /
Pratt & Whitney Canada Corp.
1000, Marie-Victorin
Longueuil, Québec
Canada J4G 1A1

EAAA000H972

P&WC JR3-6834-E [6834] (1998-06)

Désignation du matériel / Material Name	Code de traitement thermique / Heat Code	Émis le (A-M-J) / Issue Date (Y-M-D)
ROTOR-COMPRESSOR	EPECL	2006.03.26

Numéro du matériel / Material Number	Numéro de série du matériel / Material Serial Number	N° de série du mat'l. forgé / Forging Mat'l. Serial No.	Temps de fonction. / Time Since New	Cycles de fonction. / Cycles Since New
3040952	EAAA000H972	74	0	0

Nota : Pour connaître les durées de vie accumulée et résiduelle du matériel, consulter le Manuel d'entretien du moteur ou le Bulletin de service approprié, selon le cas.

Note: For determination of accumulated and remaining lives on this material, refer to the engine Maintenance Manual or Service Bulletin, as applicable.

Données sur le moteur / module - Engine / Module Data				Données sur le matériel - Material Data					
Temps de fonctionnement depuis l'installation du matériel Engine/Module TSN When Material Installed	Numéro de série du moteur / module Engine / Module Serial Number	Modèle Model	Temps de fonctionnement depuis l'enlèvement du matériel Eng / Module TSN When Material Removed	Cumul. de cette installation Accumulated This Installation		Cumul. jusqu'à présent Total Accumulated To Date		Date (A-M-J) (Y-M-D)	Observations (Installation d'entretien, de révision, bon de travail et timbre du vérificateur) Remarks (Maintenance/Overhaul, Facility, Work Order & inspection stamp)
				Temps - Time	Cycles	Temps - Time	Cycles		
0	PCE-KB0163	PT6C-67C		ØENTERED IN ERROR			T.C. 4-5b NO. 061		

REFER TO NEW CARD DATED: 31 MAR 2020

Insérer le présent historique dans le livre du moteur ou du module où la pièce est installée. - This record must be kept with the engine/module logbook where this part is installed.

CONFIDENTIAL – SUBJECT TO PROTECTIVE ORDER

Historique des pièces à durée de vie limitée
Life Limited Parts History Record

Pratt & Whitney Canada
Une société de United Technologies / A United Technologies Company

Pratt & Whitney Canada Corp.
SERVICE CENTRE ST-HUBERT
7007 de la Savane
St-Hubert, Quebec,
Canada J3Y 3X7

P&WC JR3-6904-E (2012-10)

Centre de revision
Service Center

Désignation de la pièce / Part Name	Code de traitement thermique / Heat Code	Émis le (A-M-J) / Issue Date (Y-M-D)	N° de bulletin de vente / Sales Order No.	Service
DISC-TURBINE, POWER	EPECO	2020-03-31	216894	Overhaul

Numéro du matériel / Material Number	N° de série du matériel / Material Serial No.	N° de série du mat'l. forgé / Forging Mat'l. Serial No.	Temps depuis neuf / Time Since New	Cycles depuis neuf / Cycles Since New	Manuel & Révision / Manual & Revision	Timbre du vérificateur / Inspection Stamp
3045407-01	A001Y5HN	40	4991.9	5403	MAINT. MANUAL 3045332 REV. 23	SC 142

Données sur le moteur / module - Engine / Module Data					Données sur le matériel - Material Data					
Temps depuis neuf à l'installation du matériel / Engine/Module TSN When Material Installed	Cycles depuis neuf à l'installation du matériel / Engine/Module CSN When Material Installed	N° de série du moteur / module / Engine / Module Serial No.	Modèle / Model	Temps depuis neuf à l'enlèvement du matériel / Eng / Module TSN When Material Removed	Cumul. de cette installation / Accumulated This Installation		Cumul. jusqu'à présent / Total Accumulated To Date		Date	Observations (Installation d'entretien, de révision, bon de travail et timbre du vérificateur) Référence / Remarks (Maintenance/Overhaul, Facility, Work Order & Inspection Stamp) Reference
					Temps Time	Cycles	Temps Time	Cycles		
4991.9		KB0163	PT6C-67C							

Nota : Pour connaître les durées de vie accumulée et résiduelle du matériel, consulter le Manuel d'entretien du moteur ou le Bulletin de service approprié, selon le cas.

Note: For determination of accumulated and remaining lives on this material, refer to the engine Maintenance Manual or Service Bulletin, as applicable.

Insérer le présent historique dans le livre du moteur ou du module où la pièce est installée. - This record must be kept with the engine/module logbook where this part is installed.

Export Control Classification: This document contains no technical data.

CONFIDENTIAL – SUBJECT TO PROTECTIVE ORDER

Historique du matériel à durée de vie limitée
Life Limited Material History Record

Numéro du dessin ST3582-01 - Drawing Number ST3582-01

Pratt & Whitney Canada
Une société de United Technologies / A United Technologies Company

Pratt & Whitney Canada Cie. /
Pratt & Whitney Canada Corp.
1000, Marie-Victorin
Longueuil, Québec
Canada J4G 1A1

A001Y5HN

P&WC JR3-6834-E [6834] (1998-06)

Désignation du matériel / Material Name	Numéro du matériel / Material Number	Numéro de série du matériel / Material Serial Number	Code de traitement thermique / Heat Code	Émis le (A-M-J) / Issue Date (Y-M-D)	N° de série du mat'l. forgé / Forging Mat'l. Serial No.	Temps de fonction. / Time Since New	Cycles de fonction. / Cycles Since New
DISC - TURBINE	3045407-01	A001Y5HN	EPECO	2006.03.26	40	0	0

Nota : Pour connaître les durées de vie accumulée et résiduelle du matériel, consulter le Manuel d'entretien du moteur ou le Bulletin de service approprié, selon le cas.

Note: For determination of accumulated and remaining lives on this material, refer to the engine Maintenance Manual or Service Bulletin, as applicable.

Données sur le moteur / module - Engine / Module Data				Données sur le matériel - Material Data					
Temps de fonctionnement depuis l'installation du matériel Engine/Module TSN When Material Installed	Numéro de série du moteur / module Engine / Module Serial Number	Modèle Model	Temps de fonctionnement depuis l'enlèvement du matériel Eng / Module TSN When Material Removed	Cumul. de cette installation Accumulated This Installation		Cumul. jusqu'à présent Total Accumulated To Date		Date (A-M-J) (Y-M-D)	Observations (Installation d'entretien, de révision, bon de travail et timbre du vérificateur) Remarks (Maintenance/Overhaul, Facility, Work Order & inspection stamp)
				Temps - Time	Cycles	Temps - Time	Cycles		
0	PCE-KB0163	PT6C-67C	ØENTERED IN ERROR				T.C. 4-56 NO. 061		

REFER TO NEW CARD DATED: 31 MAR 2020

CONFIDENTIAL – SUBJECT TO PROTECTIVE ORDER

Insérer le présent historique dans le livre du moteur ou du module où la pièce est installée. - This record must be kept with the engine/module logbook where this part is installed.

Historique des pièces à durée de vie limitée
Life Limited Parts History Record

Pratt & Whitney Canada
Une société de United Technologies / A United Technologies Company

Pratt & Whitney Canada Corp.
SERVICE CENTRE ST-HUBERT
7007 de la Savane
St-Hubert, Quebec,
Canada J3Y 3X7

P&WC JR3-6904-E (2012-10)

Centre de revision
Service Center

Désignation de la pièce / Part Name	Code de traitement thermique / Heat Code	Émis le (A-M-J) / Issue Date (Y-M-D)	N° de bulletin de vente / Sales Order No.	Service
DISC-TURBINE, COMPRESSOR	EPECW	2020-03-31	216894	Overhaul

Numéro du matériel / Material Number	N° de série du matériel / Material Serial No.	N° de série du mat'l. forgé / Forging Mat'l. Serial No.	Temps depuis neuf / Time Since New	Cycles depuis neuf / Cycles Since New	Manuel & Révision / Manual & Revision
3053496-01	A001Y47T	39	4991.9	3300	MAINT. MANUAL 3045332 REV. 23

Timbre du vérificateur / Inspection Stamp: SC 142

Données sur le moteur / module - Engine / Module Data					Données sur le matériel - Material Data					
Temps depuis neuf à l'installation du matériel / Engine/Module TSN When Material Installed	Cycles depuis neuf à l'installation du matériel / Engine/Module CSN When Material Installed	N° de série du moteur / module / Engine / Module Serial No.	Modèle / Model	Temps depuis neuf à l'enlèvement du matériel / Eng / Module TSN When Material Removed	Cumul. de cette installation / Accumulated This Installation		Cumul. jusqu'à présent / Total Accumulated To Date		Date	Observations (Installation d'entretien, de révision, bon de travail et timbre du vérificateur) Référence / Remarks (Maintenance/Overhaul, Facility, Work Order & Inspection Stamp) Reference
					Temps Time	Cycles	Temps Time	Cycles		
4991.9		KB0163	PT6C-67C							

Nota : Pour connaître les durées de vie accumulée et résiduelle du matériel, consulter le Manuel d'entretien du moteur ou le Bulletin de service approprié, selon le cas.

Note: For determination of accumulated and remaining lives on this material, refer to the engine Maintenance Manual or Service Bulletin, as applicable.

Insérer le présent historique dans le livre du moteur ou du module où la pièce est installée. - This record must be kept with the engine/module logbook where this part is installed.

Export Control Classification: This document contains no technical data.

CONFIDENTIAL – SUBJECT TO PROTECTIVE ORDER

Historique du matériel à durée de vie limitée
Life Limited Material History Record

Pratt & Whitney Canada
Une société de United Technologies / A United Technologies Company

Pratt & Whitney Canada Cie. /
Pratt & Whitney Canada Corp.
1000, Marie-Victorin
Longueuil, Québec
Canada J4G 1A1

A001Y47T

Numéro du dessin ST3582-01 - Drawing Number ST3582-01

P&WC JR3-6834-E [6834] (1998-06)

Désignation du matériel / Material Name	Code de traitement thermique / Heat Code	Émis le (A-M-J) / Issue Date (Y-M-D)
DISC-COMPRESSOR TURBINE	EPECW	2006.03.26

Numéro du matériel / Material Number	Numéro de série du matériel / Material Serial Number	N° de série du mat'l. forgé / Forging Mat'l. Serial No.	Temps de fonction. / Time Since New	Cycles de fonction. / Cycles Since New
3053496-01	A001Y47T	39	0	0

Nota : Pour connaître les durées de vie accumulée et résiduelle du matériel, consulter le Manuel d'entretien du moteur ou le Bulletin de service approprié, selon le cas.

Note: For determination of accumulated and remaining lives on this material, refer to the engine Maintenance Manual or Service Bulletin, as applicable.

Données sur le moteur / module - Engine / Module Data				Données sur le matériel - Material Data					
Temps de fonctionnement depuis l'installation du matériel Engine/Module TSN When Material Installed	Numéro de série du moteur / module Engine / Module Serial Number	Modèle Model	Temps de fonctionnement depuis l'enlèvement du matériel Eng / Module TSN When Material Removed	Cumul. de cette installation Accumulated This Installation		Cumul. jusqu'à présent Total Accumulated To Date		Date (A-M-J) (Y-M-D)	Observations (Installation d'entretien, de révision, bon de travail et timbre du vérificateur) Remarks (Maintenance/Overhaul, Facility, Work Order & inspection stamp)
				Temps - Time	Cycles	Temps - Time	Cycles		
0	PCE-KB0163	PT6C-67C							

ENTERED IN ERROR

T.C. 4-56 NO. 061

REFER TO NEW CARD DATED: 31 MAR 2020

Insérer le présent historique dans le livre du moteur ou du module où la pièce est installée. - This record must be kept with the engine/module logbook where this part is installed.

CONFIDENTIAL – SUBJECT TO PROTECTIVE ORDER

Historique des pièces à durée de vie limitée
Life Limited Parts History Record

Pratt & Whitney Canada
Une société de United Technologies / A United Technologies Company

Pratt & Whitney Canada Corp.
SERVICE CENTRE ST-HUBERT
7007 de la Savane
St-Hubert, Quebec,
Canada J3Y 3X7

P&WC JR3-6904-E (2012-10)

Centre de revision
Service Center

Désignation de la pièce / Part Name	Code de traitement thermique / Heat Code	Émis le (A-M-J) / Issue Date (Y-M-D)	N° de bulletin de vente / Sales Order No.	Service
SHAFT-STUB,COMPRESSOR ROTOR	EPYLE	2020-03-31	216894	Overhaul

Numéro du matériel / Material Number	N° de série du matériel / Material Serial No.	N° de série du mat'l. forgé / Forging Mat'l. Serial No.	Temps depuis neuf / Time Since New	Cycles depuis neuf / Cycles Since New	Manuel & Révision / Manual & Revision
3054380-01	PKAAA873246	403	0.0	0	MAINT. MANUAL 3045332 REV. 23

Timbre du vérificateur / Inspection Stamp: SC 142

Données sur le moteur / module - Engine / Module Data					Données sur le matériel - Material Data					
Temps depuis neuf à l'installation du matériel / Engine/Module TSN When Material Installed	Cycles depuis neuf à l'installation du matériel / Engine/Module CSN When Material Installed	N° de série du moteur / module / Engine / Module Serial No.	Modèle / Model	Temps depuis neuf à l'enlèvement du matériel / Eng / Module TSN When Material Removed	Cumul. de cette installation / Accumulated This Installation		Cumul. jusqu'à présent / Total Accumulated To Date		Date	Observations (Installation d'entretien, de révision, bon de travail et timbre du vérificateur) Référence / Remarks (Maintenance/Overhaul, Facility, Work Order & Inspection Stamp) Reference
					Temps Time	Cycles	Temps Time	Cycles		
4991.9		KB0163	PT6C-67C							

Nota : Pour connaître les durées de vie accumulée et résiduelle du matériel, consulter le Manuel d'entretien du moteur ou le Bulletin de service approprié, selon le cas.

Note: For determination of accumulated and remaining lives on this material, refer to the engine Maintenance Manual or Service Bulletin, as applicable.

Insérer le présent historique dans le livre du moteur ou du module où la pièce est installée. - This record must be kept with the engine/module logbook where this part is installed.

Export Control Classification: This document contains no technical data

CONFIDENTIAL – SUBJECT TO PROTECTIVE ORDER

Historique des pièces à durée de vie limitée
Life Limited Parts History Record

Pratt & Whitney Canada
Une société de United Technologies / A United Technologies Company

Pratt & Whitney Canada Corp.
SERVICE CENTRE ST-HUBERT
7007 de la Savane
St-Hubert, Quebec,
Canada J3Y 3X7

P&WC JR3-6904-E (2012-10)

Centre de revision
Service Center

Désignation de la pièce / Part Name	Code de traitement thermique / Heat Code	Émis le (A-M-J) / Issue Date (Y-M-D)	N° de bulletin de vente / Sales Order No.	Service
IMPELLER-CENTRIFUGAL	PZBOV	2020-03-31	216894	Overhaul

Numéro du matériel / Material Number	N° de série du matériel / Material Serial No.	N° de série du mat'l. forgé / Forging Mat'l. Serial No.	Temps depuis neuf / Time Since New	Cycles depuis neuf / Cycles Since New	Manuel & Révision / Manual & Revision
3055309-01	EAAA000N996	096	4991.9	4246	MAINT. MANUAL 3045332 REV. 23

Timbre du vérificateur / Inspection Stamp: SC 142

Données sur le moteur / module - Engine / Module Data					Données sur le matériel - Material Data					
Temps depuis neuf à l'installation du matériel / Engine/Module TSN When Material Installed	Cycles depuis neuf à l'installation du matériel / Engine/Module CSN When Material Installed	N° de série du moteur / module / Engine / Module Serial No.	Modèle / Model	Temps depuis neuf à l'enlèvement du matériel / Eng / Module TSN When Material Removed	Cumul. de cette installation / Accumulated This Installation		Cumul. jusqu'à présent / Total Accumulated To Date		Date	Observations (Installation d'entretien, de révision, bon de travail et timbre du vérificateur) Référence / Remarks (Maintenance/Overhaul, Facility, Work Order & Inspection Stamp) Reference
					Temps Time	Cycles	Temps Time	Cycles		
4991.9		KB0163	PT6C-67C							

Nota : Pour connaître les durées de vie accumulée et résiduelle du matériel, consulter le Manuel d'entretien du moteur ou le Bulletin de service approprié, selon le cas.

Note: For determination of accumulated and remaining lives on this material, refer to the engine Maintenance Manual or Service Bulletin, as applicable.

Insérer le présent historique dans le livre du moteur ou du module où la pièce est installée. - This record must be kept with the engine/module logbook where this part is installed.

Export Control Classification: This document contains no technical data.

CONFIDENTIAL – SUBJECT TO PROTECTIVE ORDER

Historique du matériel à durée de vie limitée
Life Limited Material History Record

Numéro du dessin ST3582-01 - Drawing Number ST3582-01

P&WC JR3-6834-E [6834] (1998-06)

Pratt & Whitney Canada
Une société de United Technologies / A United Technologies Company

Pratt & Whitney Canada Cie. /
Pratt & Whitney Canada Corp.
1000, Marie-Victorin
Longueuil, Québec
Canada J4G 1A1

EAAA000N996

Désignation du matériel / Material Name	Code de traitement thermique / Heat Code	Émis le (A-M-J) / Issue Date (Y-M-D)
IMPELLER - CENTRIFUGAL	PZBOV	2006.03.26

Numéro du matériel / Material Number	Numéro de série du matériel / Material Serial Number	N° de série du mat'l. forgé / Forging Mat'l. Serial No.	Temps de fonction. / Time Since New	Cycles de fonction. / Cycles Since New
3055309-01	EAAA000N996	096	0	0

Nota : Pour connaître les durées de vie accumulée et résiduelle du matériel, consulter le Manuel d'entretien du moteur ou le Bulletin de service approprié, selon le cas.

Note: For determination of accumulated and remaining lives on this material, refer to the engine Maintenance Manual or Service Bulletin, as applicable.

Données sur le moteur / module - Engine / Module Data				Données sur le matériel - Material Data					
Temps de fonctionnement depuis l'installation du matériel Engine/Module TSN When Material Installed	Numéro de série du moteur / module Engine / Module Serial Number	Modèle Model	Temps de fonctionnement depuis l'enlèvement du matériel Eng / Module TSN When Material Removed	Cumul. de cette installation Accumulated This Installation		Cumul. jusqu'à présent Total Accumulated To Date		Date (A-M-J) (Y-M-D)	Observations (Installation d'entretien, de révision, bon de travail et timbre du vérificateur) Remarks (Maintenance/Overhaul, Facility, Work Order & inspection stamp)
				Temps - Time	Cycles	Temps - Time	Cycles		
0	PCE-KB0163	PT6C-67C		ENTERED IN ERROR			T.C. 4-58 NO. 061		

REFER TO NEW CARD DATED: 31 MAR 2020

CONFIDENTIAL – SUBJECT TO PROTECTIVE ORDER

Insérer le présent historique dans le livre du moteur ou du module où la pièce est installée. - This record must be kept with the engine/module logbook where this part is installed.

Historique des pièces à durée de vie limitée
Life Limited Parts History Record

Pratt & Whitney Canada
Une société de United Technologies / A United Technologies Company

Pratt & Whitney Canada Corp.
SERVICE CENTRE ST-HUBERT
7007 de la Savane
St-Hubert, Quebec,
Canada J3Y 3X7

P&WC JR3-6904-E (2012-10)

Centre de revision
Service Center

Désignation de la pièce Part Name	Code de traitement thermique Heat Code	Émis le (A-M-J) Issue Date (Y-M-D)	N° de bulletin de vente Sales Order No.	Service
DISC-TURBINE, POWER	PZBTB	2020-03-31	216894	Overhaul

Numéro du matériel Material Number	N° de série du matériel Material Serial No.	N° de série du mat'l. forgé Forging Mat'l. Serial No.	Temps depuis neuf Time Since New	Cycles depuis neuf Cycles Since New	Manuel & Révision / Manual & Revision
3058015-01	A001Y0C9	054	4991.9	5403	MAINT. MANUAL 3045332 REV. 23

Timbre du vérificateur
Inspection Stamp
SC 142

Données sur le moteur / module - Engine / Module Data					Données sur le matériel - Material Data					
Temps depuis neuf à l'installation du matériel Engine/Module TSN When Material Installed	Cycles depuis neuf à l'installation du matériel Engine/Module CSN When Material Installed	N° de série du moteur / module Engine / Module Serial No.	Modèle Model	Temps depuis neuf à l'enlèvement du matériel Eng / Module TSN When Material Removed	Cumul. de cette installation Accumulated This Installation		Cumul. jusqu'à présent Total Accumulated To Date		Date	Observations (Installation d'entretien, de révision, bon de travail et timbre du vérificateur) Référence Remarks (Maintenance/Overhaul, Facility, Work Order & Inspection Stamp) Reference
					Temps Time	Cycles	Temps Time	Cycles		
4991.9		KB0163	PT6C-67C							

Nota : Pour connaître les durées de vie accumulée et résiduelle du matériel, consulter le Manuel d'entretien du moteur ou le Bulletin de service approprié, selon le cas.

Note: For determination of accumulated and remaining lives on this material, refer to the engine Maintenance Manual or Service Bulletin, as applicable.

Insérer le présent historique dans le livre du moteur ou du module où la pièce est installée. - This record must be kept with the engine/module logbook where this part is installed.

Export Control Classification: This document contains no technical data.

CONFIDENTIAL – SUBJECT TO PROTECTIVE ORDER

Historique du matériel à durée de vie limitée
Life Limited Material History Record

Pratt & Whitney Canada
Une société de United Technologies / A United Technologies Company

Pratt & Whitney Canada Cie. /
Pratt & Whitney Canada Corp.
1000, Marie-Victorin
Longueuil, Québec
Canada J4G 1A1

A001Y0C9

Numéro du dessin ST3582-01 - Drawing Number ST3582-01

P&WC JR3-6834-E [6834] (1998-06)

Désignation du matériel / Material Name	Code de traitement thermique / Heat Code	Émis le (A-M-J) / Issue Date (Y-M-D)
DISC - POWER TURBINE	PZBTB	2006.03.26

Numéro du matériel / Material Number	Numéro de série du matériel / Material Serial Number	N° de série du mat'l. forgé / Forging Mat'l. Serial No.	Temps de fonction. / Time Since New	Cycles de fonction. / Cycles Since New
3058015-01	A001Y0C9	054	0	0

Nota : Pour connaître les durées de vie accumulée et résiduelle du matériel, consulter le Manuel d'entretien du moteur ou le Bulletin de service approprié, selon le cas.

Note: For determination of accumulated and remaining lives on this material, refer to the engine Maintenance Manual or Service Bulletin, as applicable.

Données sur le moteur / module - Engine / Module Data				Données sur le matériel - Material Data					
Temps de fonctionnement depuis l'installation du matériel Engine/Module TSN When Material Installed	Numéro de série du moteur / module Engine / Module Serial Number	Modèle Model	Temps de fonctionnement depuis l'enlèvement du matériel Eng / Module TSN When Material Removed	Cumul. de cette installation Accumulated This Installation		Cumul. jusqu'à présent Total Accumulated To Date		Date (A-M-J) (Y-M-D)	Observations (Installation d'entretien, de révision, bon de travail et timbre du vérificateur) Remarks (Maintenance/Overhaul, Facility, Work Order & inspection stamp)
				Temps - Time	Cycles	Temps - Time	Cycles		
0	PCE-KB0163	PT6C-67C		ENTERED IN ERROR			T.C. 4-58 NO.061		

REFER TO NEW CARD DATED: 31 MAR 2020

CONFIDENTIAL - SUBJECT TO PROTECTIVE ORDER

Insérer le présent historique dans le livre du moteur ou du module où la pièce est installée. - This record must be kept with the engine/module logbook where this part is installed.

Historique d'aubes à durée de vie limitée
Life Limited Blades History Record

Numéro du dessin - Drawing Number ST3582-02

P&WC JR3-6905-E (2012-10)

Pratt & Whitney Canada
Une société de United Technologies / A United Technologies Company

Pratt & Whitney Canada Corp.
SERVICE CENTRE ST-HUBERT
7007 de la Savane
St-Hubert, Quebec,
Canada J3Y 3X7

N° de série du moteur Engine Serial No.	Modèle Model	Temps depuis neuf Time Since New	Cycles depuis neuf Cycles Since New	Émis le Issue Date AAAA-MM-JJ / YYYY-MM-DD
KB0163	PT6C-67C	4991.9	0 SC 142	2020-03-31

Bulletin de vente Sales Order	Service	Référence Reference	Nom du matériel Material Name
216894	Overhaul	.	BLADE-POWER TURBINE (MACHINING)

Données sur les aubes - Blades Data

Timbre du vérificateur
Inspection Stamp
SC 142

N° de matériel Material No.	N° de série Serial No.	Temps Time	Cycles	N° de matériel Material No.	N° de série Serial No.	Temps Time	Cycles
3045412-01	HML99530	4991.9		3045412-01	HML99536	4991.9	
3045412-01	HML99545	4991.9		3045412-01	HML99551	4991.9	
3045412-01	HML99553	4991.9		3045412-01	HML99559	4991.9	
3045412-01	HML99575	4991.9		3045412-01	HML99581	4991.9	
3045412-01	HML99583	4991.9		3045412-01	HML99590	4991.9	
3045412-01	HML99601	4991.9		3045412-01	HML99611	4991.9	
3045412-01	HML99615	4991.9		3045412-01	HML99632	4991.9	
3045412-01	HMM00973	4991.9		3045412-01	HMM01172	4991.9	
3045412-01	HMM01173	4991.9		3045412-01	HMM01179	4991.9	
3045412-01	HMM01188	4991.9		3045412-01	HMM01233	4991.9	
3045412-01	HMM01242	4991.9		3045412-01	HMM01503	4991.9	
3045412-01	HMM01507	4991.9		3045412-01	HMM01522	4991.9	
3045412-01	HMM04199	4991.9		3045412-01	HMM04212	4991.9	
3045412-01	HMM04377	4991.9		3045412-01	HMM04441	4991.9	
3045412-01	HMM04442	4991.9		3045412-01	HMM10745	4991.9	
3045412-01	HMM10784	4991.9		3045412-01	YWAA5179	0.0	
3045412-01	YWAA9859	0.0		3045412-01	YWAB3476	0.0	
3045412-01	YWAB3589	0.0		3045412-01	YWAB3629	0.0	
3045412-01	YWAC2940	0.0		3045412-01	YWAC7743	0.0	
3045412-01	YWAC7932	0.0		3045412-01	YWAC7998	0.0	
3045412-01	YWAC8016	0.0		3045412-01	YWAC8077	0.0	
3045412-01	YWAC8222	0.0		3045412-01	YWAC8259	0.0	

J 2020-03-31 07:31:30 R3 2020-03-31 07:31:30 PR1 400 PW36543 /opt/uniq/queue/tmp/mfd563904111159 08B

Fin du document
End-of-document

Export Control Classification: This document contains no technical data.

Historique d'aubes à durée de vie limitée
Life Limited Blades History Record

Numéro du dessin ST3582-02 - Drawing Number ST3582-02

Pratt & Whitney Canada
Une société de United Technologies / A United Technologies Company
Pratt & Whitney Canada Cie. /
Pratt & Whitney Canada Corp
1000, Marie-Victorin
Longueuil, Québec, Canada
J4G 1A1
450-677-9411

P&WC JR3-6833-E (1998-10)

QST 100 1620165 TQ 0005MF - GST R104287008

Numéro de série du moteur Engine Serial Number	Modèle Model	Temps de fonctionnement Time Since New	Cycles de fonctionnement Cycles Since New	Émis le (A-M-J) Issue Date (Y-M-D)
PCE-KB0163	PT6C-67C	0	0	2006.03.26

Données sur les aubes - Blades Data

Numéro de matériel Material Number	Numéro de série Serial Number	Temps/Cycles Time/Cycles	Numéro de matériel Material Number	Numéro de série Serial Number	Temps/Cycles Time/Cycles
3045412-01	HML99483		3045412-01	HML99530	
3045412-01	HML99536		3045412-01	HML99545	
3045412-01	HML99547		3045412-01	HML99551	
3045412-01	HML99552		3045412-01	HML99553	
3045412-01	HML99559		3045412-01	HML99575	
3045412-01	HML99581		3045412-01	HML99590	
3045412-01	HML99601		3045412-01	HML99611	
3045412-01	HML99615		3045412-01	HML99632	
3045412-01	HMM00973		3045412-01	HMM01172	
3045412-01	HMM01173		3045412-01	HMM01179	
3045412-01	HMM01188		3045412-01	HMM01192	
3045412-01	HMM01202		3045412-01	HMM01233	
3045412-01	HMM01242		3045412-01	HMM01265	
3045412-01	HMM01487		3045412-01	HMM01503	
3045412-01	HMM01507		3045412-01	HMM01509	
3045412-01	HMM01510		3045412-01	HMM01522	
3045412-01	HMM04199		3045412-01	HMM04212	
3045412-01	HMM04377		3045412-01	HMM04441	
3045412-01	HMM04442		3045412-01	HMM10745	
3045412-01	HMM10748		3045412-01	HMM10759	
3045412-01	HMM10760		3045412-01	HMM10769	
3045412-01	HMM10784		3045412-01	HMM10800	

REFER TO NEW CARD DATED:

Historique d'aubes à durée de vie limitée
Life Limited Blades History Record

Numéro du dessin - Drawing Number ST3582-02

P&WC JR3-6905-E (2012-10)

Pratt & Whitney Canada
Une société de United Technologies / A United Technologies Company

Pratt & Whitney Canada Corp
SERVICE CENTRE ST-HUBERT
7007 de la Savane
St-Hubert, Quebec,
Canada J3Y 3X7

Nº de série du moteur Engine Serial No.	Modèle Model	Temps depuis neuf Time Since New	Cycles depuis neuf Cycles Since New	Émis le Issue Date AAAA-MM-JJ / YYYY-MM-DD
KB0163	PT6C-67C	4991.9	~~0~~ N/A SC 142	2020-03-31

Bulletin de vente Sales Order	Service	Référence Reference	Nom du matériel Material Name
216894	Overhaul	MAINT. MANUAL 3045332 REV. 23	BLADE-COMPRESSOR TURBINE

Données sur les aubes - Blades Data

Timbre du vérificateur
Inspection Stamp
SC 142

Nº de matériel Material No.	Nº de série Serial No.	Temps Time	Cycles	Nº de matériel Material No.	Nº de série Serial No.	Temps Time	Cycles
3075491-01	HWYB2213	0.0		3075491-01	HWYB3185	0.0	
3075491-01	HWYB3187	0.0		3075491-01	HWYB3961	0.0	
3075491-01	HWYB3995	0.0		3075491-01	HWYB4317	0.0	
3075491-01	HWYB4329	0.0		3075491-01	HWYB4330	0.0	
3075491-01	HWYB4340	0.0		3075491-01	HWYB4341	0.0	
3075491-01	HWYB4350	0.0		3075491-01	HWYB4791	0.0	
3075491-01	HWYB4795	0.0		3075491-01	HWYB5409	0.0	
3075491-01	HWYB5411	0.0		3075491-01	HWYB5412	0.0	
3075491-01	HWYB5428	0.0		3075491-01	HWYB5431	0.0	
3075491-01	HWYB5443	0.0		3075491-01	HWYB5447	0.0	
3075491-01	HWYB5449	0.0		3075491-01	HWYB5731	0.0	
3075491-01	HWYB5736	0.0		3075491-01	HWYB5748	0.0	
3075491-01	HWYB5753	0.0		3075491-01	HWYB5861	0.0	
3075491-01	HWYB5869	0.0		3075491-01	HWYB6518	0.0	
3075491-01	HWYB6706	0.0		3075491-01	HWYB8286	0.0	
3075491-01	HWYB8291	0.0		3075491-01	HWYB9173	0.0	
3075491-01	HWYB9175	0.0		3075491-01	HWYB9179	0.0	
3075491-01	HWYB9454	0.0		3075491-01	HWYB9455	0.0	
3075491-01	HWYB9459	0.0		3075491-01	HWYC8671	0.0	
3075491-01	HWYC8788	0.0		3075491-01	HWYC8804	0.0	
3075491-01	HWYD0090	0.0		3075491-01	HWYD0098	0.0	
3075491-01	HWYD0109	0.0					

J 2020-03-31 07:31:06 R3 2020-03-31 07:31:06 PR1 400 PW36543 */opt/uniq/queue/tmp/mfd56390411115908B*

Fin du document
End-of-document

Export Control Classification: This document contains no technical data.

Historique d'aubes à durée de vie limitée
Life Limited Blades History Record

Numéro du dessin - Drawing Number ST3582-02

P&WC JR3-6905-E (2012-10)

Pratt & Whitney Canada
Une société de United Technologies / A United Technologies Company

Pratt & Whitney Canada Corp
SERVICE CENTRE ST-HUBERT
7007 de la Savane
St-Hubert, Quebec,
Canada J3Y 3X7

Nº de série du moteur Engine Serial No.	Modèle Model	Temps depuis neuf Time Since New	Cycles depuis neuf Cycles Since New	Émis le Issue Date AAAA-MM-JJ / YYYY-MM-DD
KB0163	PT6C-67C	4991.9	~~0~~ N/A SC 142	2020-03-31

Bulletin de vente Sales Order	Service	Référence Reference	Nom du matériel Material Name
216894	Overhaul	MAINT. MANUAL 3045332 REV. 23	BLADE-POWER TURBINE (MACHINING)

Données sur les aubes - Blades Data

Timbre du vérificateur
Inspection Stamp
SC 142

Nº de matériel Material No.	Nº de série Serial No.	Temps Time	Cycles	Nº de matériel Material No.	Nº de série Serial No.	Temps Time	Cycles
3045433-01	HMM21674	4991.9		3045433-01	HMM21679	4991.9	
3045433-01	HMM21680	4991.9		3045433-01	HMM21685	4991.9	
3045433-01	HMM21697	4991.9		3045433-01	HMM21719	4991.9	
3045433-01	HMM21720	4991.9		3045433-01	HMM21728	4991.9	
3045433-01	HMM21731	4991.9		3045433-01	HMM21740	4991.9	
3045433-01	HMM21748	4991.9		3045433-01	HMM21753	4991.9	
3045433-01	HMM21754	4991.9		3045433-01	HMM21755	4991.9	
3045433-01	HMM21763	4991.9		3045433-01	HMM21768	4991.9	
3045433-01	HMM23277	4991.9		3045433-01	HMM23290	4991.9	
3045433-01	HMM23292	4991.9		3045433-01	HMM23294	4991.9	
3045433-01	HMM23299	4991.9		3045433-01	HMM23341	4991.9	
3045433-01	HMM30521	4991.9		3045433-01	HMM30934	4991.9	
3045433-01	HMM31361	4991.9		3045433-01	HMM31364	4991.9	
3045433-01	HMM31368	4991.9		3045433-01	HMM31377	4991.9	
3045433-01	HMM32072	4991.9		3045433-01	HMM32510	4991.9	
3045433-01	HMM32515	4991.9		3045433-01	HMM32524	4991.9	
3045433-01	HMM32567	4991.9		3045433-01	HMM32588	4991.9	
3045433-01	HMM33945	4991.9		3045433-01	HMM33956	4991.9	
3045433-01	HMM33997	4991.9		3045433-01	HMM34734	4991.9	
3045433-01	HWLA3922	3258.4		3045433-01	YWAB8536	0.0	
3045433-01	YWAB9400	0.0		3045433-01	YWAB9779	0.0	
3045433-01	YWAC1996	0.0		3045433-01	YWAC2027	0.0	

J 2020-03-31 07:31:26 R3 2020-03-31 07:31:26 PR1 400 PW36543 */opt/uniq/queue/tmp/mfd563904111115908B*

Fin du document
End-of-document

Export Control Classification: This document contains no technical data.

Historique d'aubes à durée de vie limitée
Life Limited Blades History Record

Numéro du dessin ST3582-02 - Drawing Number ST3582-02

Pratt & Whitney Canada
Une société de United Technologies / A United Technologies Company

Pratt & Whitney Canada Cie. /
Pratt & Whitney Canada Corp.
1000, Marie-Victorin
Longueuil, Québec, Canada
J4G 1A1
450-677-9411

P&WC JR3-6833-E (1998-10)

QST 100 1620165 TQ 0005MF - GST R104287008

Numéro de série du moteur Engine Serial Number	Modèle Model	Temps de fonctionnement Time Since New	Cycles de fonctionnement Cycles Since New	Émis le (A-M-J) Issue Date (Y-M-D)
PCE-KB0163	PT6C-67C	0	0	2006.03.26

Données sur les aubes - Blades Data

Numéro de matériel Material Number	Numéro de série Serial Number	Temps/Cycles Time/Cycles	Numéro de matériel Material Number	Numéro de série Serial Number	Temps/Cycles Time/Cycles
3045433-01	HMM21674		3045433-01	HMM21679	
3045433-01	HMM21680		3045433-01	HMM21685	
3045433-01	HMM21697		3045433-01	HMM21719	
3045433-01	HMM21720		3045433-01	HMM21728	
3045433-01	HMM21731		3045433-01	HMM21740	
3045433-01	HMM21748		3045433-01	HMM21753	
3045433-01	HMM21754		3045433-01	HMM21755	
3045433-01	HMM21763		3045433-01	HMM21768	
3045433-01	HMM23277		3045433-01	HMM23290	
3045433-01	HMM23292		3045433-01	HMM23294	
3045433-01	HMM23299		3045433-01	HMM23341	
3045433-01	HMM30521		3045433-01	HMM30912	
3045433-01	HMM30934		3045433-01	HMM31361	
3045433-01	HMM31364		3045433-01	HMM31368	
3045433-01	HMM31377		3045433-01	HMM32072	
3045433-01	HMM32073		3045433-01	HMM32510	
3045433-01	HMM32515		3045433-01	HMM32524	
3045433-01	HMM32529		3045433-01	HMM32565	
3045433-01	HMM32567		3045433-01	HMM32572	
3045433-01	HMM32588		3045433-01	HMM33945	
3045433-01	HMM33956		3045433-01	HMM33997	
3045433-01	HMM34726		3045433-01	HMM34734	

REFER TO NEW CARD DATED:
31 MAR 2006

Historique d'aubes à durée de vie limitée
Life Limited Blades History Record

Numéro du dessin - Drawing Number ST3582-02

P&WC JR3-6905-E (2012-10)

Pratt & Whitney Canada
Une société de United Technologies / A United Technologies Company

Pratt & Whitney Canada Corp.
SERVICE CENTRE ST-HUBERT
7007 de la Savane
St-Hubert, Quebec,
Canada J3Y 3X7

N° de série du moteur Engine Serial No.	Modèle Model	Temps depuis neuf Time Since New	Cycles depuis neuf Cycles Since New	Émis le Issue Date AAAA-MM-JJ / YYYY-MM-DD
KB0163	PT6C-67C	1733.5	N/A ~~0~~ SC 50	2013-11-29

Bulletin de vente Sales Order	Service	Référence Reference	Nom du matériel Material Name
179758	Repair	MAINT. MANUAL 3045332 REV. 13	BLADE-POWER TURBINE (MACHINING)

Données sur les aubes - Blades Data

Timbre du vérificateur
Inspection Stamp

N° de matériel Material No.	N° de série Serial No.	Temps Time	Cycles	N° de matériel Material No.	N° de série Serial No.	Temps Time	Cycles
3045433-01	HMM30521	1733.5		3045433-01	HMM30912	1733.5	
3045433-01	HMM30934	1733.5		3045433-01	HMM31361	1733.5	
3045433-01	HMM31364	1733.5		3045433-01	HMM31368	1733.5	
3045433-01	HMM31377	1733.5		3045433-01	HMM32072	1733.5	
3045433-01	HMM32073	1733.5		3045433-01	HMM32510	1733.5	
3045433-01	HMM32515	1733.5		3045433-01	HMM32524	1733.5	
3045433-01	HMM32529	1733.5		3045433-01	HMM32567	1733.5	
3045433-01	HMM32572	1733.5		3045433-01	HMM32588	1733.5	
3045433-01	HMM33945	1733.5		3045433-01	HMM33956	1733.5	
3045433-01	HMM33997	1733.5		3045433-01	HMM34726	1733.5	
3045433-01	HMM34734	1733.5		3045433-01	HWLA3922	0.0	
3045433-01	HMM21674	1733.5		3045433-01	HMM21679	1733.5	
3045433-01	HMM21680	1733.5		3045433-01	HMM21685	1733.5	
3045433-01	HMM21697	1733.5		3045433-01	HMM21719	1733.5	
3045433-01	HMM21720	1733.5		3045433-01	HMM21728	1733.5	
3045433-01	HMM21731	1733.5		3045433-01	HMM21740	1733.5	
3045433-01	HMM21748	1733.5		3045433-01	HMM21753	1733.5	
3045433-01	HMM21754	1733.5		3045433-01	HMM21755	1733.5	
3045433-01	HMM21763	1733.5		3045433-01	HMM21768	1733.5	
3045433-01	HMM23277	1733.5		3045433-01	HMM23290	1733.5	
3045433-01	HMM23292	1733.5		3045433-01	HMM23294	1733.5	
3045433-01	HMM23299	1733.5		3045433-01	HMM23341	1733.5	

J 2013-11-29 07:46:15 R3 2013-11-29 07:46:15 PR1 400 BZ31548 /opt/uniq/queue/tmp/mfd563904111115908B

Fin du document
End-of-document

Export Control Classification: This document contains no technical data.

Service Centre St-Hubert
T.C. AMO Approval No. 20-00

Pratt & Whitney Canada Corp.
SERVICE CENTRE ST-HUBERT
7007 de la Savane
St-Hubert, Quebec,
Canada J3Y 3X7

List of Service Bulletins and Special Instruction incorporated this visit.

Sales Order: 216894
Customer: ERA Helicopters LLC
Module Name: GAS GENERATOR MODULE
Print Date: 06-MAY-2020
Model: PT6C-67C
Page: 001 of 001
Serial Number: KB0163

Document No.	Revision #	Class	Description
SB 41031 000	01	5	PREFORMED PACKING - REPLACEMENT OF
SB 41033 000	00	7	SCREEN ASSY. AIR INLET - REPLACEMENT OF
SB 41034 000	00	8	FUEL SWITCH, IMPENDING BYPASS & TEMPERAT
SB 41038 000	00	5	AIR SEAL, COMPRESSOR TURBINE STATOR - RE
SB 41043 000	00	7	CHIP DETECTOR VALVE - REPLACEMENT OF
SB 41057 000	05	5	SHRD. HSG., CPR. TURB. - REPLACE/MOD OF
SB 41061 000	00	6	FUEL FILTER - INSPECTION OF.
SB 41069 000	00	7	FUEL MNGT MODULE & CHIP DET VALVLE & PLU
SB 41073 000	01	6	FUEL MNGT MODULE & CHIP DET VALVLE & PLU
SB 41087 000	00	7	ROTOR COMPRESSOR TIE RODS - REPL. OF.
SB 41090 000	00	7	1ST. & 2ND. STG. CPR. STATOR ASY., - REP
SB 41092 000	01	4	DATA COLLECTION UNIT GASKET - INTRO. OF.
SB 41098 000	01	4	G.G. CASE P3 HOLES - INSP. / CLEANING OF
SB 41104 000	01	6	FUEL MANAGEMENT MOD. - REPL./MODIF. OF.
SB 41105 000	00	5	OIL NOZZLE ASSY, ACC. DRIVE - REPL. OF.
SB 41110 000	01	7	PMA G/S & ROLLER BRGS - REPLACEMENT OF
SB 41113 000	01	3	COUPLING NUT TORQUE, FUEL LINE - INSPECT
SI 149-2018 000	00	0	FLUORESCENT PENETRANT INSPEC - AGB HSG
SI 86-2019 000	00	4	ENGINE COMP RTR ASSY-BALANCE WEIGHTS

I hereby certify that the above modifications and directives have been incorporated in this engine as per the manufacturer's recommendations.

Gilles Goudreau
PWC AMO 20-00
AI 91

Authorized Inspector: Gilles Goudreau
Export Control Classification: This document contains no technical data.

Service Centre St-Hubert
T.C. AMO Approval No. 20-00

Pratt & Whitney Canada Corp.
SERVICE CENTRE ST-HUBERT
7007 de la Savane
St-Hubert, Quebec,
Canada J3Y 3X7

List of Service Bulletins and Special Instruction incorporated this visit.

Sales Order: 179758
Customer: Era Helicopters Inc.
Module Name: GAS GENERATOR MODULE
Print Date: 03-DEC-2013
Model: PT6C-67C
Page: 001 of 001
Serial Number: KB0163

Document No.	Revision #	Class	Description
SB 41027 000	00	8	PT HOUSING SEALING-RING - REPLACEMENT OF
SB 41030 000	00	3	CHECK VALVE ASSEMBLY - INSPECTION OF.
SB 41051 000	01	7	COMPR. TURBINE BLADES - REPL. OF.

I hereby certify that the above modifications and directives have been incorporated in this engine as per the manufacturer's recommendations.

Authorized Inspector: L Moore
Lloyd Moore
PWC AMO 20-00
AI 63
Export Control Classification: This document contains no technical data.

PRATT & WHITNEY CANADA

ENGINE BUILD RECORD STATUS

THE FOLLOWING SERVICE BULLETINS ARE BASIC TO :

ENGINE SERIAL NO. PCE-KB0163

ENGINE MODEL PT6C-67C

BUILD SPEC 1019

SERVICE BULLETINS

41001	41002	41003	41004	41005	41007	41008	41009	41010
41011	41012	41013	41014	41015	41016	41017	41018	41019
41020	41023							

APPROVED BY : DATE : 2006.03.26

DENIS GAUDREAU

Engine Airworthiness Directives

P&WC 2371 (2000-01)

Pratt & Whitney Canada
A United Technologies Company

Pratt & Whitney Canada Corp.
1000, Marie-Victorin
Longueuil, Québec
Canada J4G 1A1

Gas Gen Module : S.N. PCE-KB0263

Engine S/N	PCE-KB0163

Reference	A.D.'S	Sign	Lic. # or Stamp	Date
	No applicable airworthiness directives.	DENIS GAUDREAU	FC 4-58 NO.013	26 MAR 2006
Gas Gen Module	No Applicable Airworthiness Directives — moor	Lloyd Moore PWC AMO 20-00	AI 63	DEC 03 2013
Gas Gen Module	No Applicable Airworthiness Directives	Gilles Goudreau PWC AMO 20-00	AI 91	06 APR 2020
* LATE ENTRIES *	P&WC SB41033	A. [illegible]	[illegible]	3.9.10
	P&WC SB41050			3.31.11
	ASB A41053			1.10.11
	EXPORT CONTROL CLASSIFICATION This document does not contain technical data			

Engine S/N	

Reference	A.D.'S	Sign	Lic. # or Stamp	Date

Service Centre St-Hubert
T.C. AMO Approval No. 20-00

Pratt & Whitney Canada
SERVICE CENTRE ST-HUBERT
7007 de la Savane
St-Hubert, Quebec,
Canada J3Y 3X7

List of Service Bulletins and Special Instruction incorporated this visit.

Sales Order: 216894
Customer: ERA Helicopters LLC
Module Name: POWER SECTION MODULE
Print Date: 06-APR-2020
Model: PT6C-67C
Page: 001 of 001
Serial Number: KB0163

Document No.	Revision #	Class	Description
SB 41031 000	01	5	PREFORMED PACKING - REPLACEMENT OF
SB 41045 000	01	7	NO.5 BRG. HSG SUPPORT & P.T ROTOR BAL. A
SB 41057 000	05	5	SHRD. HSG., CPR. TURB. - REPLACE/MOD OF
SB 41066 000	05	4	P.T. SHAFT & STATOR ASSY., REPL. OF.
SB 41082 000	00	5	CLAMPING RING, TURBINE VANE - REPL. OF.
SB 41102 000	00	5	INSULT. BLANKET ASSY. P.S. - REPL. OF.
SB 41108 000	00	3	T5 TERMINAL NUTS - INSPECTION OF
SB 41114 000	01	7	INSULATION BLANKET - REPLACEMENT

I hereby certify that the above modifications and directives have been incorporated in this engine as per the manufacturer's recommendations.

Authorized Inspector: Gilles Goudreau
Gilles Goudreau
P&W AMO 20-00
AI 91

Export Control Classification: This document contains no technical data.

Service Centre St-Hubert
T.C. AMO Approval No. 20-00

Pratt & Whitney Canada Corp.
SERVICE CENTRE ST-HUBERT
7007 de la Savane
St-Hubert, Quebec,
Canada J3Y 3X7

Status of Airworthiness Directives for This Shop Visit

Sales Order: 216894 Customer: ERA Helicopters LLC
Description: POWER SECTION MODULE Print Date: 06-APR-2020
Model: PT6C-67C Page: 001 of 001
Serial Number: KB0163

Document No.	Revision No.	Status	Description
AWD CF-2012-24 000	00	Embodied	2ND STAGE P.T. DISK DAMAGE (PART V)

I hereby certify that the above airworthiness directives with status "EMBODIED" have been incorporated or found embodied in this engine as per the manufacturer's recommendations.

Authorized Inspector: Gilles Goudreau PWC AMO 20-00 AI 91
Export Control Classification: This document contains no technical data.

Service Centre St-Hubert
T.C. AMO Approval No. 20-00

Pratt & Whitney Canada Corp.
SERVICE CENTRE ST-HUBERT
7007 de la Savane
St-Hubert, Quebec,
Canada J3Y 3X7

List of Service Bulletins and Special Instruction incorporated this visit.

Sales Order: 179758
Customer: Era Helicopters Inc.
Module Name: POWER SECTION MODULE
Print Date: 03-DEC-2013
Model: PT6C-67C
Page: 001 of 001
Serial Number: KB0163

Document No.	Revision #	Class	Description
SB 41056 000	05	4	PT SHAFT HSG.ASSY., NO.3 BRG. SEAL RUNNE
SB 41065 000	02	5	P.T. INTERSTAGE STATOR - REPL. OF.
SB 41066 000	01	4	P.T. SHAFT & STATOR ASSY., REPL. OF.
SI 43-2013 000	00	3	EXHAUST DUCT ASSY. - INSPECTION OF.

I hereby certify that the above modifications and directives have been incorporated in this engine as per the manufacturer's recommendations.

Lloyd Moore
PWC AMO 20-00
A1
63

Authorized Inspector: L Moore
Export Control Classification: This document contains no technical data.

Service Centre St-Hubert
T.C. AMO Approval No. 20-00

Pratt & Whitney Canada Corp.
SERVICE CENTRE ST-HUBERT
7007 de la Savane
St-Hubert, Quebec,
Canada J3Y 3X7

Status of Airworthiness Directives for This Shop Visit

Sales Order: 179758 Customer: Era Helicopters Inc.
Description: POWER SECTION MODULE Print Date: 03-DEC-2013
Model: PT6C-67C Page: 001 of 001
Serial Number: KB0163

Document No.	Revision No.	Status
	Description	
AWD CF2012-24 000	00	Embodied
	2ND STAGE P.T. DISK DAMAGE (PART V)	
FAA 2013-03-14 000	00	Embodied
	P.T. BAFFLE RET. RING - INSPECTION OF.	

I hereby certify that the above airworthiness directives with status "EMBODIED" have been incorporated or found embodied in this engine as per the manufacturer's recommendations.

Lloyd Moore
PWC AMO 20-00
AI 63

Authorized Inspector: L Moore
Export Control Classification: This document contains no technical data.

Engine Airworthiness Directives

P&WC 2371 (2000-01)

Pratt & Whitney Canada
A United Technologies Company

Pratt & Whitney Canada Corp.
1000, Marie-Victorin
Longueuil, Québec
Canada J4G 1A1

Power Section Module: S.N. PS-KB0163

Engine S/N	PCE-KB0163

Reference	A.D.'S	Sign	Lic. # or Stamp	Date
	No applicable airworthiness directives.	DENIS GAUDREAU		26 MAR 2006
P. S. Module	Refer to Attached "Status of Airworthiness Directives for this Shop Visit"		Lloyd Moore PWC AMO 20-00 AI 63	DEC 03 2013
P. S. Module	Refer to Attached "Status of Airworthiness Directives for this Shop Visit"		Gilles Goudreau PWC AMO 20-00 AI 91	06 APR 2020
* LATE ENTRIES *	P+WC SB41035 P+WC SB41050 ASB A41053			3.9.10 5.31.11 1.10.11

Era

Airport service Rd
Lake Charles LA USA

Form M-004

SERVICEABLE

Description:	Part Number:	Serial Number:	Mfr.Lot / Lot Number:	Qty:	Comp. ID:
EXHAUST NOZZLE ASSY, L/H	3G7800L00632	CURTI317		1	ENG-13159

TSN:	TSO:	Next Maintenance:	Next Maintenance Due:
1	1		

Object Type:	Ref. Doc. No:	Date:	PO Number:
Tracked Component			PO245-125859-2020

****REMOVED SERVICEABLE DETAILS****

A/C Registration Number:	NHA Part Number:	NHA Serial Number:	Position Code:
Component Replacement No:	Removed By:	Removal Station:	Removal Date:
Removal Code:	Reason for Removal Remarks:		

Comments: Repaired by Aircraft Technology - MMICHAELIS

[X] Era Owned Part [ ] Vendor Owned Part

Date Generated: 06/01/2020

Era

Airport service Rd
Lake Charles LA USA

Form M-004

SERVICEABLE

Part Description:	Part Number:	Serial Number:	Mfr.Lot / Lot Number:	Qty:	Comp. ID:
EXHAUST NOZZLE ASSY, L/H	3G7800L00632	CURTI317		1	ENG-13159

TSN:	TSO:	Next Maintenance:	Next Maintenance Due:
1	1		

Object Type :	Ref. Doc. No :	Date:	PO Number:
Tracked Component			PO245-125859-2020

****REMOVED SERVICEABLE DETAILS****

A/C Registration Number:	NHA Part Number :	NHA Serial Number:	Position Code:
Component Replacement No:	Removed By:	Removal Station:	Removal Date:
Removal Code:	Reason for Removal Remarks:		

Comments: Repaired by Aircraft Technology - MMICHAELIS

[X] Era Owned Part [ ] Vendor Owned Part

Date Generated: 06/01/2020

1. Approving Civil Aviation Authority/Country:	2.	3. Form Tracking Number:
FAA/United States	**AUTHORIZED RELEASE CERTIFICATE** **FAA Form 8130-3, AIRWORTHINESS APPROVAL TAG**	W0057214

Organization Name and Address:	5. Work Order/Contract/Invoice Number:
AIRCRAFT TECHNOLOGY, INC. Repair Station# ETQR115L 3000 TAFT STREET, HOLLYWOOD FL 33021 A HEICO COMPANY	4802205844/03#20

6. Item:	7. Description:	8. Part Number:	9. Quantity:	10. Serial Number:	11. Status/Work:
1	AW139 Exhaust Nozzle (LH)	3G7800L00632	1	CURTI 317	REPAIRED

12. Remarks:

Exhaust Nozzle was inspected and repaired to replace the unit's thermal blanket IAW FAA/DER # EA15-02 (Rev A , dated 06/16/2016)- Repair 01, 02 and 03 . All details of the work performed are on file at this Repair Station under Work Order # 57214

Repair:
o Repair Task-01 Thermal Blanket Replacement
o Repair Task-02 Duct Weld
o Repair Task-03 Duct Patch

Certifies that the work specified in Blocks 11/12 was carried out in accordance with EASA Part 145 and, with respect to that work, the component is considered ready for release to service under EASA Part 145 Approval Number EASA.145.4108.
----------End of Remarks----------

13a. Certifies the Items identified above were manufactured in conformity to:	14a. ☒ 14 CFR 43.9 Return to Service ☒ Other regulation specified in Block 12
☐ Approved design data and are in a condition for safe operation. ☐ Non-approved design data specified in Block 12.	Certifies that unless otherwise specified in Block 12, the work identified in Block 11 and described in Block 12 was accomplished in accordance with Title 14, Code of Federal Regulations, part 43 and in respect to that work, the items are approved for return to service.

13b. Authorized Signature:	13c. Approval/Authorization No.:	14b. Authorized Signature:	14c. Approval/Certificate No.:
			ETQR115L
13d. Name (Typed or Printed):	**13e. Date (dd/mmm/yyyy):**	**14d. Name (Typed or Printed):**	**14e. Date (dd/mmm/yyyy):**
		Glenn Aca	28 MAY 2020

User/Installer Responsibilities

It is important to understand that the existence of this document alone does not automatically constitute authority to install the engine/propeller/article.

Where the user/installer performs work in accordance with the national regulations of an airworthiness authority different than the airworthiness authority of the country specified in the Block 1, it is essential that the user/installer ensure that his/her airworthiness authority accepts aircraft engine(s)/propeller(s)/article(s) from the airworthiness authority of the country specified in Block 1.

Statements in Blocks 13a and 14a do not constitute installation certification. In all cases, aircraft maintenance records must contain an installation certification issued in accordance with the national regulations by the user/installer before the aircraft may be flown.

CONFIDENTIAL – SUBJECT TO PROTECTIVE ORDER BRISTOW 010957

COMPLETE THIS SECTION AT THE END OF THE INSPECTION

A/C REG:	N811TA	**ENGINE S/N:**	PCE-KB0163
A/C TOTAL TIME:	6984.5		
LOG PAGE:	3063749		
RELEASE DATE:	3/30/22		

All Technicians who initial items on this form are required to legibly enter their Signature and License Number below:

Printed Name	Signature	Initials	License No.
Cory Tatmus	Cory Tatmus	CT	AP4260978
Clay Brown	Clay Brown	CB	A3003424

- This form to be used in conjunction with the Airframe and/or Engine manufacturers' manuals.
- Procedures contained in the General Maintenance Manual will be utilized for all items listed with Dual Inspection Requirements.

Attention!: This form contains tasks with Dual Inspection Requirements

Pre-Inspection			
Task	**Reference**	**AMT**	**Inspector**
01. Ensure all times, cycles, etc. on the Aircraft Maintenance Log are consistent with Ramco.		CJ	
02. Check Aircraft Maintenance Log for discrepancies and/or deferred items.		CJ	
03. Check the aircraft Ramco Due List and the After Installation Sheet for items that are due.		CJ	

Inspection			
Task	**Reference**	**AMT**	**Inspector**
01. Drain and refill the engine oil. **(BP Turbo Oil 2380)**	P&WC PT6C-67C MM Ch. 72-00-00	CJ	
02. Replace the oil filter element.	P&WC PT6C-67C MM Ch. 79-20-02	CJ	
03. Visually inspect engine wiring harnesses for chafing, cracks, corrosion and wear. Check all connectors for security.	P&WC PT6C-67C MM Ch. 73-20-40	CJ	
04. Visually inspect engine tubing and painted casings for cracks, distortion, chafing, wear, corrosion, and security of connections, clamps and brackets. Check for evidence of fuel or oil leaks.		CJ	
05. Inspect the engine exhaust duct for cracks, distortions and corrosion.	P&WC PT6C-67C MM Ch. 72-50-05	CJ	
06. Inspect the gas generator case for cracks, distortions and corrosion.	P&WC PT6C-67C MM Ch. 72-50-05	CJ	
07. Inspect the air inlet screen for cleanliness, distortions and overall condition.	P&WC PT6C-67C MM Ch. 72-20-00	CJ	
08. Remove the chip detectors and perform an operational check. When done, clean with a lint free cloth and install serviceable chip detectors.	P&WC PT6C-67C MM Ch. 79-30-01	CJ	
09. Replace the engine fuel filter.	PW&C PT6C-67C MM Ch. 73-20-00	CB	CJ

Completion			
Task	**Reference**	**AMT**	**Inspector**
01. Check all work areas for rags, tools, and miscellaneous hardware.		CA	
02. Check all fluid levels.		CA	
03. Perform a ground run and leak check the work performed during this inspection.		CA	
04. Perform a Manual Mode Response Check.	AW139 MM Ch. 39-A-76-11-00-00A-320A-A	CA	
05. Check that all doors, cowlings and fairings are closed and secured.		CA	
06. Secure the helicopter. Complete the logbook and Ramco entries for inspection compliance.		CA	

END OF INSPECTION

Transport Canada Transports Canada

TP 14182E

(Revised 05/2005)

Engine Logbook

GAS GENERATOR MODULE LOG BOOK

Canada

CONFIDENTIAL – SUBJECT TO PROTECTIVE ORDER BRISTOW 010961

Other related Transport Canada Publications:
TP 14089B
TP 14058E/F

Previous Edition:
TP 3910E, 2nd Edition (Jan. 1987)
TP 14182E (Dec. 2003)

Printed in Canada.

Please direct your comments, orders and inquiries to:

Transport Canada
Civil Aviation Communications Centre (AARC)
Place de Ville,
Tower C, 5th Floor
330 Sparks Street
Ottawa, ON K1A 0N8

Telephone: 1 800 305-2059
Fax: 613 957-4208
E-mail: services@tc.gc.ca

© Her Majesty the Queen in Right of Canada, as represented by the Minister of Transport (2005).

® Permission granted for internal use only:

This publication may be reproduced for internal use only without permission, provided the source is fully acknowledged. However, multiple copy reproduction of this publication in whole or in part for purposes of resale or redistribution requires prior written permission from the Minister of Public Works and Government Services, Ottawa, Ontario, Canada K1A 0S5 or at copyright.droitdauteur@communication.gc.ca.

TP 14182E
(05/2005)
TC-1001185
Catalogue No. T52-4/2-2003E

Volume #: 1

Opened on: 26 MAR 2006

ENGINE DETAILS

1. Manufacturer **PRATT & WHITNEY CANADA CORP.**

2. Type/Model/Series **PT6** C-67C **BUILD SPEC #** 1019

3. Serial Number **PCE-** KB0163

CONFIDENTIAL – SUBJECT TO PROTECTIVE ORDER BRISTOW 010963

CONFIDENTIAL – SUBJECT TO PROTECTIVE ORDER BRISTOW 010964

ENGINE TECHNICAL RECORD

INSTRUCTIONS FOR USE

General

This engine logbook is part of the permanent technical record for the engine described on page i. Only information that is directly applicable to the engine should be entered into this log. Information relating to the airframe, propellers, or other components having their own technical records, should be entered into those records. Entries may be made either by writing directly in the log pages, or by completion of separate typed reports, which are then pasted, or otherwise permanently attached to the applicable sections of the logbook. The regulatory requirements for permanent technical records are contained in Division IV of Subpart 605 of the *Canadian Aviation Regulations* (CARs).

Users may adopt different date formats to conform to local convention. Upon commencing a new page, enter an example of the date format to be used in the space provided at the top of each date column. For example, enter "dd/mm/yy" if date will be entered in the sequence day, month and the last two digits of the year. All date entries on that page must then conform to the format indicated. When an entry takes up more than one row, draw a line through the unused cells of the affected rows to prevent the entry of unrelated information.

Maintenance may be recorded directly in this log, together with the applicable maintenance release, or it may be first recorded and certified in the aircraft journey log, and then transcribed into this log no later than thirty days following the events concerned. Where maintenance is originally certified in the journey log, there is no need for a second maintenance release when the particulars (along with the name and authorization reference[1] of the person who made the original entry) are transcribed into this log however the name of the person making the transcription must be entered. Persons who transcribe entries are responsible only for the accuracy of the transcription, not for the work described.

When an entry made in this technical record is signed and an authorization reference is entered adjacent to the signature, the entry constitutes the maintenance release required by CAR 605.85, and indicates that the maintenance has been performed in accordance with the applicable airworthiness requirements.

Engine information (front page)

On bringing this log into use, enter the appropriate volume number, the date, and other applicable information relating to the engine in the spaces provided on page i. Upon starting a new volume, current information found in Sections 2 thru 5 of the completed log are to be transcribed from the previous volume.

Section 1: Record of engine maintenance and elementary work

For each item of maintenance or elementary work performed on the engine (including compliance with airworthiness directives and the removal and installation of items that have their own permanent technical records) enter the date, engine total time in service since new (if known), time since engine overhaul (and/or engine cycles, as applicable) and a brief description of the task, in the appropriate cells. Where the information is transcribed from the aircraft journey log, the name of the person transcribing the information should be printed (not signed) in the signature cell, and a line struck through the "AME ACA/AMO SCA/AMO" cell.

[1] e.g., an Aircraft Maintenance Engineer (AME) licence number, or an Aircraft Certifying Authority (ACA) or Shop Certifying Authority (SCA) reference, together with the applicable Approved Maintenance Organization (AMO) number

CONFIDENTIAL – SUBJECT TO PROTECTIVE ORDER BRISTOW 010965

Where the information is being recorded for the first time, and relates to a task that requires a maintenance release, the person issuing the release must sign in the signature cell, and enter the applicable authorization reference in the "AME ACA/AMO SCA/AMO" cell.

Section 2: Record of engine installations

For each engine installation, enter the aircraft registration; the date installed, the position, the total time in service since the engine was new (if known), the total time in service since the engine was overhauled, and the aircraft's total time in service at installation. Leave the remainder of the cells empty. Do not strike a line through these cells. When the engine is removed, fill in the rest of the line with the date removed, the aircraft's total time in service at removal, the engine hours accumulated while installed, the engine's time since new, the engine's time since overhaul, the reason for removal and the name (not the signature) of the person making the entry. Where engine time is requested, enter the engine time and/or engine cycles, as applicable.

Section 3: Record of engine component installations

Make an entry in this Section for each installation of any component for which a permanent technical record has been established (e.g. life-limited components). Enter the date, the total time since engine overhaul (and/or engine cycles, as applicable) at the time of the installation, a description of the item (e.g. fuel control unit, high pressure fuel pump, governor, etc.) type/model/series, serial number, and the position in which the item is installed (e.g. left, upper, auxiliary, No. 1, etc.). Leave the remaining cells empty. Do not strike a line through these cells.

When a component is subsequently removed, the person making the entry relating to the removal must complete the record of that component's installation by entering, in the appropriate cells, the removal date, the reason for the component removal (e.g. time expired, defective, out of limits, etc.) and the name (not the signature) of the person making the entry. In most cases, this will occur at the same time as the entry for installation of the replacement component.

Do not enter maintenance releases in this section. Every entry in this Section will also have a corresponding entry in Section 1, and the maintenance release will be included either there or in the aircraft journey log.

Section 4: Record of airworthiness directives, airworthiness limitations, and equivalent mandatory requirements

Make an entry in this Section in respect of each airworthiness directive, airworthiness limitation, life limit, or other mandatory requirement that applies to the engine or any installed component that constitutes part of the engine. Do <u>not</u> include information relating to items that are recorded in the component logs. Only make entries in relation to mandatory requirements. Do <u>not</u> make entries in this section relating to optional or merely recommended tasks, such as those recommended in service bulletins that have not been made mandatory by airworthiness directives or equivalent documents.

The entry should include the airworthiness directive/airworthiness limitation/equivalent mandatory requirement reference, the date the mandatory instruction becomes effective, the compliance threshold (hours, cycles, date, etc.), and, in the case of recurring requirements, the interval, a brief description of the item (e.g. inspect engine case for cracks) and the name (not the signature) of the person making the entry.

Note that the date to be entered is that upon which a mandatory instruction becomes effective, not the date upon which the mandated action is performed. In some cases, entries may be required in this Section relating to actions that are not required for a considerable time. In the case of airworthiness limitations, the entry must be made upon first bringing the log into use. In the case of an airworthiness directive, the entry should be made as soon as possible, but in no case later than the date upon which the directive comes into effect.

CONFIDENTIAL – SUBJECT TO PROTECTIVE ORDER BRISTOW 010966

When entering details of the compliance threshold and interval, indicate the applicable units (e.g. 20,000 cycles, 500 hours). Where no threshold is specified, draw a diagonal line through the "Compliance Threshold" cell. Where no repetitive action is called for, draw a diagonal line through the "Compliance Interval" cell.

Do not record or certify the actual performance of mandatory tasks in this Section. These entries should be recorded in Section 1 and, where applicable, in the aircraft journey log.

Section 5: Record of engine major modifications and repairs, and supplemental Instructions for Continued Airworthiness (ICA)

Use this Section to indicate any major repairs or modifications to the engine, regardless of whether they involve supplemental ICA. Also use this section to record any other circumstances such as the use of alternative parts that have been approved through the Parts Design Approval (PDA) process, if the approval refers to supplemental ICA. Supplemental ICA are instructions, additional to those of the original type certificate holder, published by the holders of Supplemental Type Certificates (STC), Repair Design Approvals (RDA) or PDA.

Supplemental ICA may relate to scheduled maintenance requirements, or to non-scheduled requirements (such as installation instructions, change in torque loadings or lubrication instructions, etc.). Information related to supplemental ICA must be entered in the technical record to alert owners, operators and maintenance personnel of the need to take these additional instructions into account.

For each entry, include the date the change was incorporated, the identity of the change (e.g. the STC, RDA or PDA number) and a brief description (e.g. "Repair and modification of compressor outlet interstage case", "Replacement starter clutch spring", etc.).

In the cell headed "ICA", enter Yes ('Y') or No ('N') as appropriate, to indicate if the approval document for the change includes supplemental ICA.

If the approval document for the change does not include supplemental ICA, then the cell headed "Sched. change" should also have an 'N' entered in it. If the approval document does include supplemental ICA, enter either an 'N' or a 'Y' in this cell as appropriate, to indicate if the ICA include scheduled maintenance requirements.

In the cell headed "Description of Changes", briefly describe the nature of the ICA (e.g. installation instructions, 100 hour inspection, etc) and, if possible, a reference to where the full details can be found (e.g. STC holder's publication reference and/or Internet Web address). Finally, enter the name of the person making the entry.

Do not record or certify the modifications, repairs and/or parts installations in this Section. These entries should be recorded in Section 1 and, where applicable, in the aircraft journey log.

CONFIDENTIAL – SUBJECT TO PROTECTIVE ORDER BRISTOW 010967

Section 1: Record of engine maintenance and elementary work

Date - - / - - / - -	Time since new	Time since overhaul	Total cycles	Details of task
26 MAR 2006	0.0	0.0	0	**New engine final acceptance test and inhibiting run completed satisfactorily an in condition for safe operation.** **The restrictions from the canadian engin type certificate E-32 issue 5 are as follow Note 4 : The PT6C-67C EEC has not bee fire tested and therefore, must not be mounted in a designated fire zone.**
10-26-06	0	0	0	Inst. on #2 side of Ac TC-515 TF-826
~~7-26-2010~~	~~1111.7~~	~~1111.7~~	~~1352~~	~~c/w 600hr Fuel Nozzle inspec~~
8-27-2010	1136.4	1136.4	1386	Rmvd Fmm P/N-8063-893 S/N-1 169% NG on start up. Instd. Fmm S/N 078210 actt-1744.3 tc-1901
8-29-10	1141.9	1141.9	1394	c/w Fuel Nozzle Replace., c/w tc-1909 tf-3121

	Signature	AME ACA/AMO SCA/AMO
This Gas Generator module is combined with Power Section S/N: PS- KB0163		
NG/√0 34500 Rpm, at 1100 Shp/δ√0		
ITT Trim: 58.0 C° N/A Ohms		
Torque Trim Slope: 1.020 Datum: 0.12	DENIS GAUDREAU	TC 4-58 NO.013
813DG 4S 483574 ACTT-607.9		4804200655
~~4S 079379 acTT-1719.6 TC-1167 TT-3051~~		
46 33210 TT/TSO-1136.4, hung start & will not go above P/N-8063-894 S/N-15062622. TT-1518.0 TT-3115		ERA 020
top 4 Fuel nozzle. 4S 078212 (078808) acTT-1749.8		ERA 020
Refer to Power Section module Logbook for removal 8-22-2013 T.S.N. 1733.5		
DEC 03 2013		
Lloyd Moore PWC AMO 20-00 AI 63		

CONFIDENTIAL – SUBJECT TO PROTECTIVE ORDER BRISTOW 010969

Section 1: Record of engine maintenance and elementary work

Date - - / - - / - -	Time since new	Time since overhaul	Total cycles	Details of task

Registre de maintenance
Maintenance Log
Centre de service révision - St-Hubert
Service centre St-Hubert

Pratt & Whitney Canada
Une société de United Technologies / A United Technologies Company

Pratt & Whitney Canada Corp.
SERVICE CENTER ST-HUBERT
7007 de la savane
St-Hubert, Québec,
Canada J3Y 3X7

P&WC 11501 (2013-09) Page 6

Fabricant - Manufacturer:	Désignation - Description:		Modèle - Model	No de série - Serial No:
PRATT & WHITNEY CANADA	TURBOSHAFT GAS GEN MODULE		PT6C-67C	PCE- KB0163
Bon de vente - Sale order:	**TSN**	**CSN**	**SSN**	**FSN**
179758	1733.5	N/A	N/A	N/A
Travail effectué - Work performed:	**TSO**	**CSO**	**SSO**	**FSO**
REPAIRED	N/A	N/A	N/A	N/A

THIS GAS GEN MODULE HAS BEEN INSPECTED, REPAIRED, MODIFIED, TESTED AND PROCESSED IN A/W PT6C-67C OVERHAUL MANUAL REV. 9, MAINTENANCE MANUAL REV. 14, APPROVED DATA AND SPECIFICATION NO. G-PT6ALL REV.1.5.

1) ALL CANADIAN A.D.S AND AMERICAN (F.A.A) A.D.'S WERE VERIFIED AND THERE ARE NO APPLICABLE A.D.'S TO THIS MODULE
2) ORIGINAL OIL FILTER INSTALLED. NEW FUEL FILTER INSTALLED.
3) TESTED WITH SLAVE ELECTRONIC ENGINE CONTROL, IGNITION EXCITER AND SHIPPED LESS.
4) MATED, TESTED AND SHIPPED WITH POWER SECTION MODULE S.N. PS-KB0163 S.O: 179758
5) TEST RUN PERFORMED AND FOUND SATISFACTORY.
   C.T. VANE AREA: 6.74 (NOT DISMANTLED) P.T. VANE AREA: 23.20 CAVITY: 2S2
   I.T.T. TRIM BIAS: 87.0 DEG. "C"
   TORQUE TRIM SLOPE: 1.021 TORQUE TRIM DATUM: -1.21
   COMP. TRIM WIEGHTS: E31N N/R N/R N/R

NOTE: EXPORT CONTROL CLASSIFICATION: THIS DOCUMENT CONTAINS NO TECHNICAL DATA.

03 Dec 2013	Moore	Lloyd Moore PWC AMO 20-00 AI 63
Date (YY-MM-DD)	**Vérificateur autorisé** **Authorized Inspector**	**T.C AMO No 20-00**

	Signature	AME ACA/AMO SCA/AMO

CONFIDENTIAL – SUBJECT TO PROTECTIVE ORDER BRISTOW 010971

Section 1: Record of engine maintenance and elementary work

Date --/--/--	Time since new	Time since overhaul	Total cycles	Details of task
11-13-2014	2319.2	2319.2	2590	*P&WC SB 41030
				*67C Eng. Ignition Insp.
				*FCOC Detailed Insp. S/N: WA1115
				@ACTT: 2388.0; ACTC: 1378;
1-9-2015	2334.6	2334.6	2607	C/W 67C Eng. oil filter @ACTT:
				N81ITA
2-11-2015	2410.2	2410.2	2652	C/W. P&WC SB41030 @ACTT: 247
3-10-2015	2425.5	2425.5	2664	C/W SB41030
				C/W 900 hour Inspection
				C/W Engine Oil Filter
				N81ITA - @ ACTT: 2494.3
6-19-15	2517.1	2517.1	2712	C/W P&WC SB41030 @ACTT: 258
7-23-15	2611.3	2611.3	2755	C/W 67C TOP 4 fuel nozzle
				ACTT: 3349; N81ITA; 4/S
7-23-15	2611.3	2611.3	2755	C/W P&WC SB41030 @ ACTT: 2
8-20-15	2701.1	2701.1	2795	C/W P&WC SB41030 @ ACTT 27
9-20-15	2790.3	2790.3	2837	C/W P&WC SB41030 @ ACTT 28
10-21-15	2880.0	2880.0	2882	C/W P&WC SB41030 @ ACTT 294
Late Entry				
10-18-15	2871.9	2871.9	2878	C/W 67C Top 4 Fuel Nozzles
				C/W 67C Replace All Fuel Nozzl
				N81ITA @ ACTT: 2940.7 ; AC
11-25-15	2970.6	2970.6	2926	C/W P&WC SB41030 @ ACTT: 303

	Signature	AME ACA/AMO SCA/AMO
7; P/N: 10845B @ Part TT: 2319.2 ACTF: 2988 ; N811TA; 4s# 164184	[illegible]	UDGA290L
2403.4; ACTC: 1395, ACTF: 3033 4s# 164209	[illegible]	UDGA290L
7; ACTC: 1440; ACTF: 3125; N811TA; 4s# 127460	[illegible]	UDGA290L
Inspection: ACTC: 1452 ACTF: 3147; VP-000283-2015	[illegible]	UDGA290L
5.9 ACTC: 1500; ACTF; 3249; 4S 174467, N811TA	[illegible]	UDGA290L
's replace 13, 14, 1, & 2 @ ACTF: 2680.1; ACTC: 1543 74104	[illegible]	UDGA290L
680.1; ACTC: 1543; ACTF: 3349; 4s 174104; N811TA	[illegible]	UDGA290L
69.9, ACTC: 1583, ACTF: 3443, N811TA 4s# 134236	[illegible]	UDGA290L
591; ACTC: 1625; ACTF: 3527; N811TA, 4s# 134272	[illegible]	UDGA290L
8.8; ACTC: 1670; ACTF: 3618; N811TA, 4s# 192684	[illegible]	UDGA290L
es; 7 ea P/N (3073976-01) & (3073974-01) TC: 16666 ; ACTF: 3612 , 4s# 192679	[illegible]	UDGA290L
9.4; ACTC: 1714; ACTF: 3710, N811TA 4s# 134461	[illegible]	UDGA290L

CONFIDENTIAL – SUBJECT TO PROTECTIVE ORDER BRISTOW 010973

Section 1: Record of engine maintenance and elementary work

Date --/--/--	Time since new	Time since overhaul	Total cycles	Details of task
12-25-15	3062.3	3062.3	2969	C/W P&WC SB 41030, N811TA
2-12-18	3431.0	3431.0	3174.	C/W-67C Replace Top 4 Fu C/W-67C Replace All Fuel N811TA @ ACTT: 3499.8
5-29-18	3718.9	3718.9	3304	C/W-67C Replace Top 4 811TA @ ACTT: 3787.7
9-14-18	4008.2	4008.2	3422.	C/W-67C Replace Top 4 Fue C/W-67C Replace Lower 10 Fu N811TA @ ACTT: 4077.0
1-15-19	4294.6	4294.6	3554.	C/W-67C Replace Top 4 N811TA. @ ACTT: 4363.
6-26-19	4538.5	4538.5	3681	Removed Bleed Valve Installed Bleed Valve N811TA ACTT: 4607.3
7-10-19	4577.5	4577.5	3718	C/W -67C Replace Top 4 N811TA ACTT: 4646.3
7-22-19	4614.3		3716	P&WC SB41048 is not applicable by part nu torque sensor installed. UOGA290L
7-17-19	4601.6	4601.6	3743	C/W - 67C Replace All manifold N811TA ACTT: 4670.4
12-9-19	4991.9	4991.9	3913	Remove Engine S/N: N811TA @ ACTT: 5060.7

	Signature	AME ACA/AMO SCA/AMO
ATT: 3131.1 ACTC: 1757 ACTF: 3803; 4s 134487	[illegible]	[illegible]
el Nozzles, 13, 14, 1 & 2.		
Nozzles (two) P/N: 3073974-01 & P/N: 3073976-01		
, ACTC - 1962, ACTC - 4175. 4s# 277625	R Welch	110GA290L
Fuel Nozzles - 13, 14, 1 & 2. 4s 280566		
, ACTC: 2092, ACTF: 4464.	R Welch	110GA290L
l Nozzles, 13, 14, 1 & 2.		
el Nozzles, P/N: 3073974-01, P/N: 3073976-01		
, ACTF: 4744. 4s# 282192.	R Welch	110GA290L
Fuel Nozzles, 13, 14, 1 & 2 4s 281349		
4, ACTC: 2342, ACTF: 5044.	R Welch	110GA290L
P.N. 540-1920-5 SN. XMA330; fails test		
P.N. 540-1920-5 SN. 2217; TSO: 0.0		
ACTC: 2469, ACTF: 5326 4/s 3017337	K. Howard	110GA290L
Fuel Nozzles. 13, 14, 1 + 2		
ACTC: 2487, ACTF: 5363 4/s 3017591	K. Howard	110GA290L
umber		
	[illegible]	[illegible]
l Fuel Nozzles and inspect fuel		
ACTC: 2498 ACTF: 5388 4s 3017600	K. Howard	110GA290L
KB01163 from 811TA 4/s 3001273		
ACTC: 26668 ACTF: 5761	K. Howard	110GA290L

CONFIDENTIAL – SUBJECT TO PROTECTIVE ORDER BRISTOW 010975

Section 1: Record of engine maintenance and elementary work

Date -- / -- / --	Time since new	Time since overhaul	Total cycles	Details of task

Registre de maintenance
Maintenance Log
Centre de service révision - St-Hubert
Service centre St-Hubert

Pratt & Whitney Canada
Une société de United Technologies / A United Technologies Company

Pratt & Whitney Canada Corp.
SERVICE CENTER ST-HUBERT
7007 de la savane
St-Hubert, Québec,
Canada J3Y 3X7

P&WC 11501 -7 (2019-04)

Fabricant - Manufacturer:	Désignation - Description:		Modèle - Model	No de série - Serial No:
PRATT & WHITNEY CANADA	TURBOSHAFT GAS GEN MODULE		PT6C-67C	PCE- KB0163
Bon de vente - Sale order:	**TSN**	**CSN**	**SSN**	**FSN**
216894	4991.9	N/A	N/A	N/A
Travail effectué - Work performed:	**TSO**	**CSO**	**SSO**	**FSO**
OVERHAULED	0.0	N/A	N/A	N/A

THIS GAS GEN MODULE HAS BEEN OVERHAULED, MODIFIED, TESTED AND PROCESSED IN A/W PT6C-67C OVERHAUL MANUAL REV. 15, APPROVED DATA AND SPECIFICATION NO. G-PT6 ALL REV. 2.1.

- ALL CANADIAN A.D.'S WERE VERIFIED AND THERE ARE NO APPLICABLE A.D.'S TO THIS MODULE.
- MATED, TESTED AND SHIPPED WITH POWER SECTION MODULE S/N: PS-KB0163.
- TESTED WITH SLAVE IGNITION REGULATOR, ELECTRONIC ENGINE CONTROL UNIT AND SHIPPED LESS.
- NEW OIL FILTER INSTALLED. NEW FUEL FILTER INSTALLED.
- QTY: (14) FUEL NOZZLES OVERHAULED.
- TEST RUN PERFORMED AND FOUND SATISFACTORY.

C.T. VANE AREA: 6.83 P.T. VANE AREA: 22.60 CAVITY: 2S2
I.T.T. TRIM BIAS: 52.0 DEG. "C"
COMP. TRIM WIEGHTS: G19N - N/R - N/R - N/R

EXPORT CONTROL CLASSIFICATION : THIS DOCUMENT CONTAINS NO TECHNICAL DATA

Marc-André Poitras
PWC AMO 20-00
AI 2

2020-05-07		
Date (YY-MM-DD)	**Vérificateur autorisé** **Authorized Inspector**	**T.C AMO No 20-00**

7-8-2020	4991.9	0	3913	Inst. Engine Assy on ACTT: 5437.0 ACC: 2831 * Power Section module

Signature	AME ACA/AMO SCA/AMO

Accessory record
Service Centre St-Hubert
P&WC 11501 -8 (2019-04)

Pratt & Whitney Canada
Une société de United Technologies/A United Technologies Company

Pratt & Whitney Canada Cie.
Pratt & Whitney Canada Corp.
7007, Chemin de la Savane
St.Hubert, Québec
Canada J3Y 3X7

Engine SN:	PCE- KB0163	Sales order:	216894	Engine TSN:	4991.9

Status	Installed			Installed		
Description	Duplex Fuel Nozzles			Simplex Fuel Nozzles		
Part Number	3073976-01			3073974-01		
	Serial Number	Unit Time	Position	Serial Number	Unit Time	Position
	DE1ANN1556	TSO: 0.0	4	DE1BPU1034	TSO: 0.0	1
	DE1AEA2082	TSO: 0.0	5	DE1BAB1785	TSO: 0.0	2
	DE1BFN1268	TSO: 0.0	6	DEAAAA19153	TSO: 0.0	3
	DE1BAT0290	TSO: 0.0	10	DE1BRM1508	TSO: 0.0	7
	DE1BEH1737	TSO: 0.0	11	DEAAA12891	TSO: 0.0	8
	DE1BPF0371	TSO: 0.0	13	DEAAAA41930	TSO: 0.0	9
	DE1BRR2024	TSO: 0.0	14	DEAAAA42982	TSO: 0.0	12
	**********	******	******	**********	******	******
	**********	******	******	**********	******	******
	**********	******	******	**********	******	******

07 May 2020
Date

Gilles Goudreau
PWC AMO 20-00
AI 91

Vérificateur autorisé
Authorized Inspector T.C. AMO No. 20-00

EXPORT CONTROL CLASSIFICATION:
This document does not contain technical data.

PWC 9589 (2019-04) Page 6 TSN: 4991.9
S/O: 216894 S/N: KB0163

Pratt & Whitney Canada
Une société de United Technologies / A United Technologies Company

Reference Document		Part Name	Part Number	Serial Number	T.S.N.	C.S.N.
Maint. Manual 3045332	23	COMP ROTOR #1	3039001	FRAEPYAL78	0.0	0
		COMP SHAFT	3054380-01	PKAAA873246	0.0	0
		COMP ROTOR #2	3040952	EAAA000H972	4991.9	4246
		COMP ROTOR #3	3040933	EAAA000P879	4991.9	4246
		COMP ROTOR #4	3040944	EAAA000P010	4991.9	4246
		IMPELLER	3055309-01	EAAA000N996	4991.9	4246
		C.T. DISK	3053496-01	A001Y47T	4991.9	3300
		P.T. DISK #1	3045407-01	A001Y5HN	4991.9	5403
		P.T. DISK #2	3058015-01	A001Y0C9	4991.9	5403

NOTE: For remaining Cycles and/or Time refer to current appropriate documentation

07 MAY 2020

Gilles Goudreau
PWC AMO 20-00
AI 91

N811TA, L/H side		
ACTI: 6126 VP-000532-2020	M. Robbins	U0GR29a
converted from Build Spec BS1019 to BS963		

CONFIDENTIAL – SUBJECT TO PROTECTIVE ORDER BRISTOW 010977

Section 1: Record of engine maintenance and elementary work

Date --/--/--	Time since new	Time since overhaul	Total cycles	Details of task
1-14-21	5268.7	276.8	4050	C/W - 67C Eng Oil Filter Insp
				NSIITA @ ACTT: 5713.8
1-18-21	5278.2	286.3	4055	
				C/W - ~~57~~ 67C P2.8 Check Vlv In
				C/W - 67C Comp Rotor Insp.
				C/W - 67C P3 Screen —
				NSIITA @ ACTT 5723.3
2-25-21	5406.7	414.8	4127.	C/W - 67C Engine Oil Filter In
				NSIITA - @ ACTT: 3851.8
3-31-21	5509.6	517.7	4186	C/W - 67C ENGINE OIL FILTER
				NSIITA @ ACTT: 5954.7
5-2-21	5568.1	576.2	4230	C/W - 67C P2.8 Check Vlv In-
				C/W - 67C Comp Rotor Insp.
				C/W - 67C P3 Screen —
				SIITA @ ACTT: 6013.2 , AC
5-5-21	5587.5	595.4	4239.	C/W - 67C Replace AN Fuel Nor
				67C Eng Ignition Insp
				C/W FCOC Detailed Insp.
				NSIITA @ ACTT: 6032.6
5-24-21	5649.4	657.1	4274.	C/W Eng oil Filter Insp.
				C/W - 67C Inspection.
				NSIITA @ ACTT: 6094.7
7-6-21	5785.8	793.9	4351	C/W - 67C Comp Rotor Insp
				SIITA @ ACTT: 6230.9
7-7-21	5791.9	800	4354.	C/W - 67C Eng oil Filter In
				NSIITA @ ACTT: 6230.9

	Signature	AME ACA/AMO SCA/AMO
45302T062.		
ACTC: 3001. , ACTF: 6460.	Delelch	UOGA290L
SIN: 2217 @ PTT. 5008.7		
ACTC: 3006, ACTF: 6470.	Delelch	UOGA290L
45 3028330		
ACTC: 3078 , ACTF: 6610.	Delelch	UOGA290L
INSPECTION 45 3028371		
ACTC: 3137 , ACTF: 6722	A. [illegible]	UOGA290L
45 3053543		
SIN 2217 , P/N 540-1920-5 @ PTT: 5298.6		
ACTC: 3180 , ACTF: 6802.	Delelch	UOGA290L
45 3053547		
S/N WA59863 , P/N 10845B @ TSN: 595.6		
ACTC: 3190 , ACTF: 6836.	Delelch	UOGA290L
45 3053572		
ACTC 3225 , ACTF: 6911	Delelch	UOGA290L
45 3056747		
ACTC: 3302. , ACTF: 7083.	Delelch	UOGA290L
45 3056748		
ACTC: 3302. , ACTF: 7083.	Delelch	UOGA290L

CONFIDENTIAL – SUBJECT TO PROTECTIVE ORDER BRISTOW 010979

Section 1: Record of engine maintenance and elementary work

Date --/--/--	Time since new	Time since overhaul	Total cycles	Details of task
8-19-21	5860.3	868.4	4390	C/W PTGC-67C P2.8 CH
				C/W PTGC-67C P3 SCREE
				W/S 3007459 N811TA @
9-9-21	5934.4	942.5	4440.	C/W-67C Eng oil Filter Insp
				N811TA @ ACTT: 6379.5
11-2-21	6077.0	1085.1	4556.	C/W-67C Eng oil Filter I
				C/W-67C Comp Rotor Insp.
				N811TA @ ACTT: 6522.1
11-20-21	6149.8	1157.9	4617.	C/W-67C P2.8 Check Vlv I
				C/W-67C P3 Screen
				N811TA @ ACTT: 6594.9
11-28-21	6178.3	1186.4	4638.	C/W-67C Eng Ignition Insp
				FCOC Detail Insp. S/W WA 5918
				N811TA @ ACTT: 6623.4
12-11-21	6218.3	1226.4	4673.	C/W-67C Eng oil Filter T
				N811TA. @ ACTT: 6663.4
12-11-21	6218.3	1226.4	4673	C/W-67C Eng oil Filter
				N811TA. @ ACTT: 6663.4
12-16-21	6242.0	1290.1	4692.	C/W-67C Replace All Fuel Noz
				N811TA. @ ACTT: 6687.3
1-27-22	6359.6	1407.7	4779.	C/W-67C Eng Oil Filter
				N811TA @ ACTT: 6804.7
1-30-22	6370.0	1418.1	4785	C/W- Comp Rotor Insp.
				N811TA @ ACTT 6815.1

		Signature	AME ACA/AMO SCA/AMO
ECIC	V-V INSP.		
30	INSP. P/N: 540-1920-5; S/N: 2217 @ PTT: 5540.8		
	ACTT: 6305.4; ACTC: 3341; ACTF: 7175	A. [illegible]	UOCA2902
	45 3007481		
	ACTC: 3391. , ACTF: 7265	[illegible]	UOCA2902
Insp	45 3087098		
	ACTC: 3507 , ACTF: 7471.	[illegible]	UOCA2902
Insp	45 3063421		
	S/N 2217		
	ACTC 3568 , ACTF: 7573.	[illegible]	UOCA2902
2	45 3063431		
563			
	ACTC: 3589, , ACTF: 7611	[illegible]	UOCA2902
Insp	45 3063443		
4	ACTC. 3624 , ACTF: 7675	[illegible]	UOCA2902
Insp	45 3063443		
	ACTC 3624 , ACTF: 7675.	[illegible]	UOCA2902
Ies	45 3063448.		
	ACTC: 3643 , ACTF: 7708.	[illegible]	UOCA2902
Insp	45 3063497		
	ACTC: 3730 , ACTF 7868.	[illegible]	UOCA2902
	45 3063503		
	ACTC: 3736, , ACTF: 7881.	[illegible]	UOCA2902

CONFIDENTIAL – SUBJECT TO PROTECTIVE ORDER BRISTOW 010981

Section 1: Record of engine maintenance and elementary work

Date --/--/--	Time since new	Time since overhaul	Total cycles	Details of task
2-17-22	6443.2	1451.3	4824.	C/W - 67C P3 Screen -
				C/W - 67C P.2.8 Check VLV Ins
				N811TA @ ACTT: 6888.3
3-15-22	6499.3	1507.4	4854	C/W - 67C ENGINE OIL FIL
				N811TA @ ACTT: 6944.4
5-4-22	6643.6	1651.7	4938.	C/W - 67C Eng oil Insp.
				N811TA @ ACTT: 7088.7
5-10-22	6660.7	1668.3	4947	C/W - 67C Comp Rotor Insp.
				N811TA @ ACTT: 7105.3
6-10-22	6736.5	1744.6	4995.	C/W - 67C P2.8 Check VLV In
				N811TA @ ACTT: 7181.6
				C/W - 67C P3 Screen SN: 2217
6-21-22	6770.9	1779.0	5013.	C/W - 67 Eng Ignition Insp
				C/W - FCOC Detail Insp.
				N811TA @ ACTT: 7216.0
6-27-22	6784.0	1792.1	5020	C/W - 67C Eng oil Filter
				N811TA @ ACTT: 7229.1
7-8-22	6818.3	1826.4	5039.	C/W - 67C Replace All fuel Nozz
				N811TA @ ACTT: 7263.4
8-13-22.	6919.0	1927.1	5095.	C/W - 67C Eng oil Filter
				N811TA @ ACTT: 7364.
8-25-22	6948.9	1957.0	5112.	C/W - 67C Comp Rotor In
				N811TA @ ACTT: 7394.

	Signature	AME ACA/AMO SCA/AMO
SN 2214, PN: 540-1920-5 @ TSN: 6173.7 45 3063528		
ACTC: 3775, ACTF: 7985.	[illegible]	[illegible]
45 3063733		
ACTC: 3805; ACTF: 8053	[illegible]	[illegible]
453034081		
ACTC: 3889, ACTF: 8250	[illegible]	[illegible]
45 3034088		
ACTC: 3898, ACTF: 8273.	[illegible]	[illegible]
45 3044128		
ACTC: 3946, ACTF: 8371	[illegible]	[illegible]
PN: 540-1920-5	[illegible]	[illegible]
453018961		
SN: WA59863		
ACTC: 3964, ACTF: 8411	[illegible]	[illegible]
Insp. 45 3018972.		
ACTC: 3971, ACTF: 8427	[illegible]	[illegible]
45 3018985		
ACTC: 3990, ACTF: 8470		
Insp. 453115089		
ACTC: 4046, ACTF: 8596.	[illegible]	[illegible]
45 3115166.		
ACTC: 4063, ACTF: 8638.	[illegible]	[illegible]

CONFIDENTIAL – SUBJECT TO PROTECTIVE ORDER BRISTOW 010983

Section 1: Record of engine maintenance and elementary work

Date - - / - - / - -	Time since new	Time since overhaul	Total cycles	Details of task
9-17-22	7027.6	2635.7	5156	Chw-67C P2.8 Check VL✓
				Chw-67C P3 Screen SW: 22
				N811TA @ ACTT: 7472.7

CONFIDENTIAL – SUBJECT TO PROTECTIVE ORDER

	Signature	AME ACA/AMO SCA/AMO
45 3115136		
DN: 540-1920-5 @ TSN: 6758.1		
ACTC: 4106, ACTF: 8736.	[illegible]	[illegible]

CONFIDENTIAL – SUBJECT TO PROTECTIVE ORDER BRISTOW 010985

Section 2: Record of engine installations

Installation						Removal		
Aircraft registration	Date installed --/--/--	Position	Engine time since new[2]	Engine time since overhaul[2]	Aircraft time at installation	Date removed --/--/--	Aircraft time at removal	Engine hours this installation[2]
N813DG	10-27-06	#2	0.0	NEW	607.9	8-22-13	2341.4	1733.5
N811TA	12-18-13	#2	1733.5	1733.5	1802.3	12-9-19	5060.7	3258.4
N811TA	7-8-20	#1	4991.9	0.0	5437.0			

[2] Where engine time is requested, enter the engine time and/or engine cycles, as applicable.

Removal (cont'd)

Engine time since new[2]	Engine time since overhaul[2]	Reason for removal	Entered by (print)
1733.5	1733.5	Overspeed greater than 103%; torque above 80%.	M. Robbins
4991.9	4991.9	Due Overhaul	K Howard

CONFIDENTIAL – SUBJECT TO PROTECTIVE ORDER BRISTOW 010987

Section 2: Record of engine installations

Installation						Removal		
Aircraft registration	Date installed - - / - - / - -	Position	Engine time since new[2]	Engine time since overhaul[2]	Aircraft time at installation	Date removed - - / - - / - -	Aircraft time at removal	Engine hours this installation[2]
N813DG	10-27-06	#2	0.0	New	607.9			

[2] Where engine time is requested, enter the engine time and/or engine cycles, as applicable.

Section 3: Records of engine component installations

Date installed --/--/--	Engine time since overhaul	Total cycles	Component description	Type/Model/Series/ Part Number
6-26-19	4538.5	3681	Bleed Valve	540-1920-5

CONFIDENTIAL – SUBJECT TO PROTECTIVE ORDER BRISTOW 010989

Serial Number	Position	Date removed --/--/--	Reason for removal	Entered by (print)
2217	—			

CONFIDENTIAL – SUBJECT TO PROTECTIVE ORDER BRISTOW 010990

Section 5: Record of engine major modifications and repairs, and supplemental Instructions for Continued Airworthiness (ICA)

Date embodied --/--/--	STC/RDA/PDA	Description of changes	ICA (Y/N)
DEC 03 2013		Refer to Attached Mod Listing	
05 MAY 2010	—	Refer to Attached Mod Listing	—

Sched. change (Y/N)	Description of changes to ICA and reference to applicable documents	Entered by (print)
		L Moore Lloyd Moore PWC AMO 20-00 AI 63
		Gilles Goudreau Gilles Goudreau PWC AMO 20-00 AI 91

CONFIDENTIAL – SUBJECT TO PROTECTIVE ORDER BRISTOW 010992

Transport Canada Transports Canada

TP 14182E

(Revised 05/2005)

Engine Logbook

POWER SECTION MODULE LOG BOOK

Canada

CONFIDENTIAL – SUBJECT TO PROTECTIVE ORDER BRISTOW 010993

Other related Transport Canada Publications:
TP 14089B
TP 14058E/F

Previous Edition:
TP 3910E, 2nd Edition (Jan. 1987)
TP 14182E (Dec. 2003)

Printed in Canada.

Please direct your comments, orders and inquiries to:

Transport Canada
Civil Aviation Communications Centre (AARC)
Place de Ville,
Tower C, 5th Floor
330 Sparks Street
Ottawa, ON K1A 0N8

Telephone: 1 800 305-2059
Fax: 613 957-4208
E-mail: services@tc.gc.ca

© Her Majesty the Queen in Right of Canada, as represented by the Minister of Transport (2005).

® Permission granted for internal use only:

This publication may be reproduced for internal use only without permission, provided the source is fully acknowledged. However, multiple copy reproduction of this publication in whole or in part for purposes of resale or redistribution requires prior written permission from the Minister of Public Works and Government Services, Ottawa, Ontario, Canada K1A 0S5 or at copyright.droitdauteur@communication.gc.ca.

TP 14182E
(05/2005)
TC-1001185
Catalogue No. T52-4/2-2003E

Volume #: 1

Opened on: 26 MAR 2006

ENGINE DETAILS

1. Manufacturer **PRATT & WHITNEY CANADA CORP.**

2. Type/Model/Series **PT6** C-67C **BUILD SPEC #** 1019

3. Serial Number **PS-** KB0163

CONFIDENTIAL – SUBJECT TO PROTECTIVE ORDER BRISTOW 010995

CONFIDENTIAL – SUBJECT TO PROTECTIVE ORDER BRISTOW 010996

ENGINE TECHNICAL RECORD

INSTRUCTIONS FOR USE

General

This engine logbook is part of the permanent technical record for the engine described on page i. Only information that is directly applicable to the engine should be entered into this log. Information relating to the airframe, propellers, or other components having their own technical records, should be entered into those records. Entries may be made either by writing directly in the log pages, or by completion of separate typed reports, which are then pasted, or otherwise permanently attached to the applicable sections of the logbook. The regulatory requirements for permanent technical records are contained in Division IV of Subpart 605 of the *Canadian Aviation Regulations* (CARs).

Users may adopt different date formats to conform to local convention. Upon commencing a new page, enter an example of the date format to be used in the space provided at the top of each date column. For example, enter "dd/mm/yy" if date will be entered in the sequence day, month and the last two digits of the year. All date entries on that page must then conform to the format indicated. When an entry takes up more than one row, draw a line through the unused cells of the affected rows to prevent the entry of unrelated information.

Maintenance may be recorded directly in this log, together with the applicable maintenance release, or it may be first recorded and certified in the aircraft journey log, and then transcribed into this log no later than thirty days following the events concerned. Where maintenance is originally certified in the journey log, there is no need for a second maintenance release when the particulars (along with the name and authorization reference[1] of the person who made the original entry) are transcribed into this log however the name of the person making the transcription must be entered. Persons who transcribe entries are responsible only for the accuracy of the transcription, not for the work described.

When an entry made in this technical record is signed and an authorization reference is entered adjacent to the signature, the entry constitutes the maintenance release required by CAR 605.85, and indicates that the maintenance has been performed in accordance with the applicable airworthiness requirements.

Engine information (front page)

On bringing this log into use, enter the appropriate volume number, the date, and other applicable information relating to the engine in the spaces provided on page i. Upon starting a new volume, current information found in Sections 2 thru 5 of the completed log are to be transcribed from the previous volume.

Section 1: Record of engine maintenance and elementary work

For each item of maintenance or elementary work performed on the engine (including compliance with airworthiness directives and the removal and installation of items that have their own permanent technical records) enter the date, engine total time in service since new (if known), time since engine overhaul (and/or engine cycles, as applicable) and a brief description of the task, in the appropriate cells. Where the information is transcribed from the aircraft journey log, the name of the person transcribing the information should be printed (not signed) in the signature cell, and a line struck through the "AME ACA/AMO SCA/AMO" cell.

[1] e.g., an Aircraft Maintenance Engineer (AME) licence number, or an Aircraft Certifying Authority (ACA) or Shop Certifying Authority (SCA) reference, together with the applicable Approved Maintenance Organization (AMO) number

CONFIDENTIAL – SUBJECT TO PROTECTIVE ORDER BRISTOW 010997

Where the information is being recorded for the first time, and relates to a task that requires a maintenance release, the person issuing the release must sign in the signature cell, and enter the applicable authorization reference in the "AME ACA/AMO SCA/AMO" cell.

Section 2: Record of engine installations

For each engine installation, enter the aircraft registration; the date installed, the position, the total time in service since the engine was new (if known), the total time in service since the engine was overhauled, and the aircraft's total time in service at installation. Leave the remainder of the cells empty. Do not strike a line through these cells. When the engine is removed, fill in the rest of the line with the date removed, the aircraft's total time in service at removal, the engine hours accumulated while installed, the engine's time since new, the engine's time since overhaul, the reason for removal and the name (not the signature) of the person making the entry. Where engine time is requested, enter the engine time and/or engine cycles, as applicable.

Section 3: Record of engine component installations

Make an entry in this Section for each installation of any component for which a permanent technical record has been established (e.g. life-limited components). Enter the date, the total time since engine overhaul (and/or engine cycles, as applicable) at the time of the installation, a description of the item (e.g. fuel control unit, high pressure fuel pump, governor, etc.) type/model/series, serial number, and the position in which the item is installed (e.g. left, upper, auxiliary, No. 1, etc.). Leave the remaining cells empty. Do not strike a line through these cells.

When a component is subsequently removed, the person making the entry relating to the removal must complete the record of that component's installation by entering, in the appropriate cells, the removal date, the reason for the component removal (e.g. time expired, defective, out of limits, etc.) and the name (not the signature) of the person making the entry. In most cases, this will occur at the same time as the entry for installation of the replacement component.

Do not enter maintenance releases in this section. Every entry in this Section will also have a corresponding entry in Section 1, and the maintenance release will be included either there or in the aircraft journey log.

Section 4: Record of airworthiness directives, airworthiness limitations, and equivalent mandatory requirements

Make an entry in this Section in respect of each airworthiness directive, airworthiness limitation, life limit, or other mandatory requirement that applies to the engine or any installed component that constitutes part of the engine. Do <u>not</u> include information relating to items that are recorded in the component logs. Only make entries in relation to mandatory requirements. Do <u>not</u> make entries in this section relating to optional or merely recommended tasks, such as those recommended in service bulletins that have not been made mandatory by airworthiness directives or equivalent documents.

The entry should include the airworthiness directive/airworthiness limitation/equivalent mandatory requirement reference, the date the mandatory instruction becomes effective, the compliance threshold (hours, cycles, date, etc.), and, in the case of recurring requirements, the interval, a brief description of the item (e.g. inspect engine case for cracks) and the name (not the signature) of the person making the entry.

Note that the date to be entered is that upon which a mandatory instruction becomes effective, not the date upon which the mandated action is performed. In some cases, entries may be required in this Section relating to actions that are not required for a considerable time. In the case of airworthiness limitations, the entry must be made upon first bringing the log into use. In the case of an airworthiness directive, the entry should be made as soon as possible, but in no case later than the date upon which the directive comes into effect.

CONFIDENTIAL – SUBJECT TO PROTECTIVE ORDER BRISTOW 010998

When entering details of the compliance threshold and interval, indicate the applicable units (e.g. 20,000 cycles, 500 hours). Where no threshold is specified, draw a diagonal line through the "Compliance Threshold" cell. Where no repetitive action is called for, draw a diagonal line through the "Compliance Interval" cell.

Do not record or certify the actual performance of mandatory tasks in this Section. These entries should be recorded in Section 1 and, where applicable, in the aircraft journey log.

Section 5: Record of engine major modifications and repairs, and supplemental Instructions for Continued Airworthiness (ICA)

Use this Section to indicate any major repairs or modifications to the engine, regardless of whether they involve supplemental ICA. Also use this section to record any other circumstances such as the use of alternative parts that have been approved through the Parts Design Approval (PDA) process, if the approval refers to supplemental ICA. Supplemental ICA are instructions, additional to those of the original type certificate holder, published by the holders of Supplemental Type Certificates (STC), Repair Design Approvals (RDA) or PDA.

Supplemental ICA may relate to scheduled maintenance requirements, or to non-scheduled requirements (such as installation instructions, change in torque loadings or lubrication instructions, etc.). Information related to supplemental ICA must be entered in the technical record to alert owners, operators and maintenance personnel of the need to take these additional instructions into account.

For each entry, include the date the change was incorporated, the identity of the change (e.g. the STC, RDA or PDA number) and a brief description (e.g. "Repair and modification of compressor outlet interstage case", "Replacement starter clutch spring", etc.).

In the cell headed "ICA", enter Yes ('Y') or No ('N') as appropriate, to indicate if the approval document for the change includes supplemental ICA.

If the approval document for the change does not include supplemental ICA, then the cell headed "Sched. change" should also have an 'N' entered in it. If the approval document does include supplemental ICA, enter either an 'N' or a 'Y' in this cell as appropriate, to indicate if the ICA include scheduled maintenance requirements.

In the cell headed "Description of Changes", briefly describe the nature of the ICA (e.g. installation instructions, 100 hour inspection, etc) and, if possible, a reference to where the full details can be found (e.g. STC holder's publication reference and/or Internet Web address). Finally, enter the name of the person making the entry.

Do not record or certify the modifications, repairs and/or parts installations in this Section. These entries should be recorded in Section 1 and, where applicable, in the aircraft journey log.

CONFIDENTIAL – SUBJECT TO PROTECTIVE ORDER BRISTOW 010999

Section 1: Record of engine maintenance and elementary work

Date --/--/--	Time since new	Time since overhaul	Total cycles	Details of task
26 MAR 2006	0.0	0.0	0	**New engine final acceptance test completed satisfactorily and is in condition for safe operation.**
10-26-06	0	0	0	Inst. on #2 side of A/C. This work was done
10.08.10	1180.5	1180.5	1457	Complied w/ -67c Engine ignition cable and MIXLIS# 078483 3224 acts: 392
01.07.2011	1256.0	1256.0	1562	Complied w/ P&WC Assembly on eng. LIS# 078674 acts: 402
01.09.2011	~~1867.2~~ 1259.3	1259.3	1564	Complied w/ ASB A41053 on eng. Assy S/N @ actt: 1867.2
3.09.~~2012~~ 2011	1334.5	1334.5	1667	Complied with -67c P&WC SB41050 1/7 configuration 7 and N813DG. MIX LIS # actf: 3604 acts- 402. Inspection of the KB01163. Complied w/ top 4 Engine fuel on PWC PT6C-67C on eng. KB 01163

	Signature	AME ACA/AMO SCA/AMO
This Power Section module is combined with Gas Generator S/N: PCE- KB0163		
NG/√0 34500 Rpm, at 1100 Shp/δ√0		
ITT Trim: 58.0 C° N/A Ohms		
Torque Trim Slope: 1.020 Datum: 0.12	DENIS GAUDREAU	
813DG ACTT- 609.9 TC-515 TF- 826 on ERA Log sheet 483574		
Ignition inspection - Visually inspected Ignitor Plugs i/a/w PWLC item. @ actt: 1788.5 actc: 1972 actf: N813DG		ERA 31C
SB41030 - Inspection of the Check valve Assy S/n PCE-KB0163. N813DG; mix @ actt: 1863.9 actc: 2077 actf: 3411		ERA 31C
- Inspection of the fuel filter installation PCE- KB0163; N813DG LS# 078676 actc: 2081 actf: 3419 actf: 402		ERA 31C
900 hour eng. inspection & Complied w/ Replacement of fuel nozzles ecology system accumulator - 178842 @ actt 1942.4 actc: 2182 Also Complied w/ PWC SB41030 - check valve Assembly. on eng s/n - 67c Replacement of the nozzles: 13 14, 1 and 2 as shown MM 73-10-05 figure 202 - note: Rum012 dated 3.3.11		ERA 31C

Page 1

Section 1: Record of engine maintenance and elementary work

Date --/--/--	Time since new	Time since overhaul	Total cycles	Details of task
~~8.28.11~~ 9.1.11	1428.1	1428.1	1742	Complied w/ PWC SB 41060 bearing cover S/N KB0163 ; N813DG ~~Calc did not fly between~~ 2260 actf: 3716
8.28.11	1421.6	1421.6	1742	* Back dated * Clw PWC SB41059- N813DG ; mlx LIS# actf: 2257
4.10.12	1495.2	1495.2	1799	Complied w/ P&WC Check valve KB0163 ; N813DG 2103 actc: 2314
5/25/12	1500.3	1500.3	1805	Complied w/
12-7-2012	1625.0	1625.0	2084	Clw Replace top 4 engine PWC PT6C-67C MM N813DG ACTT: 2232.9
07.20.13	1715.9	1715.9	2199	Complied w/ TSK Eng assy. S/N PCE-KB Removed / Replaced and 7 each Supplex 2323.8 ACTC: 2114
8-22-2013	1733.5	1733.5	2226	Rmvd. Engine Assy. from torque above 80% ACTT 2341.4 ACTC-2241

	Signature	AME ACA/AMO SCA/AMO
- BoreScope inspection of the P1 retaining ring on eng. Assy mix US # 125810 dated 9.1.11 @ actt: 2028.5 act: 2036.0 actc: acts: 402		ERA 31C
on engine assembly s/n KB0163; 125508 @ actt: 2024.5 actc 2257 acts: 402		ERA 31C
SB41030> inspection of the assembly on eng s/n mix US # 094748 @ actt: actt: 3832		ERA 31C
- 67 900 hr eng. insp. on S/N KB0163 N813DG mix US# 094770 actt 2108.2 actc 2320 actf: 3848		ERA 31C
fuel nozzles: 13, 14, 1 & 2 as shown on 13-10-05 Fig. 202 ACTC: 2599 ACTF: 4336 ACTS: 454 ; 4s#: 168428	UOAG290L	
67c Replace All fuel nozzles on 0163 on N813DG per mix US# 081518 Tea Duplex F/N p/n 3073976-01 F/N p/n 3073974-01 @ Actt: Actf - 4532 Acts - 493.		UOGA290L
N813DG - Over speed greater than 103%; ACTF - 4587 Slgs - 493. 4s# - 108243	Meagan Robbins	UOGA290L

CONFIDENTIAL – SUBJECT TO PROTECTIVE ORDER BRISTOW 011003

Section 1: Record of engine maintenance and elementary work

Date -- / -- / --	Time since new	Time since overhaul	Total cycles	Details of task

Registre de maintenance
Maintenance Log
Centre de service révision - St-Hubert
Service centre St-Hubert

Pratt & Whitney Canada
Une société de United Technologies / A United Technologies Company

Pratt & Whitney Canada Corp.
SERVICE CENTER ST-HUBERT
7007 de la savane
St-Hubert, Québec,
Canada J3Y 3X7

P&WC 11501 (2013-09) Page 7

Fabricant - Manufacturer:	Désignation - Description:		Modèle - Model	No de série - Serial No:
PRATT & WHITNEY CANADA	TURBOSHAFT POWER SECTION MODULE		PT6C-67C	PS- KB0163
Bon de vente - Sale order: 179758	TSN 1733.5	CSN N/A	SSN N/A	FSN N/A
Travail effectué - Work performed: REPAIRED	TSO N/A	CSO N/A	SSO N/A	FSO N/A

THIS POWER SECTION MODULE HAS BEEN INSPECTED, REPAIRED, MODIFIED, TESTED AND PROCESSED IN A/W PT6C-67C OVERHAUL MANUAL REV.9, MAINTENANCE MANUAL REV.14, APPROVED DATA AND SPECIFICATION NO.G-PT6ALL REV.1.5.

1) ALSO INSPECTED IN A/W LIGHT OVERHAUL MANUAL SECTION FOR NPT OVERSPEED INTO AREA "C"
2) ALL CANADIAN A.D.S AND AMERICAN (F.A.A) A.D.'S WERE VERIFIED.
3) MATED ,TESTED AND SHIPPED WITH GAS GEN MODULE S.N. PCE-KB0163 S.O: 179758
4) TEST RUN PERFORMED AND FOUND SATISFACTORY.
   C.T. VANE AREA: 6.74 (NOT DISMANTLED) P.T. VANE AREA: 23.20 CAVITY: 2S2
   I.T.T. TRIM BIAS: 87.0 DEG. "C"
   TORQUE TRIM SLOPE: 1.021 TORQUE TRIM DATUM: -1.21

NOTE: EXPORT CONTROL CLASSIFICATION: THIS DOCUMENT CONTAINS NO TECHNICAL DATA.

03 Dec 2013
Date (YY-MM-DD)

L Moore
Vérificateur autorisé
Authorized Inspector

Lloyd Moore
PWC AMO 20-00
AI 63
T.C AMO No 20-00

1-23-14	1791.4	1791.4	2258	C/W P&WC SB41030@ACTT:1860.2;

	Signature	AME ACA/AMO SCA/AMO
ACTC: 1046; ACTF: 2263; 5/95.0; 4/5/58117	Megan Tobias	UOGHGA

CONFIDENTIAL – SUBJECT TO PROTECTIVE ORDER BRISTOW 011005

Section 4: Record of engine maintenance and elementary work

Date --/--/--	Time since new	Time since overhaul	Total cycles	Details of task
12-18-13	1733.5	1733.5	2226	Instd. Engine Assy on 811TA
1-20-14	1771.5	1771.5	2247	4W Eng Oil Filter Insp. 811TA @
3-5-14	1882.9	1882.9	2312	C/W P&WC SB 41030 Insp. 811TA @
3-13-14	1911.3	1911.3	2327	C/W 67C Eng oil filter @ ACTT: 1980.1;
3-17-14	1913.6	1913.6	2329	C/W PT6C-67C P3 Screen Bleed valve ACTF: 2401; N811TA; 4S111371.
4-21-14	1974.9	1974.9	2360	C/W P&WC SB 41030 @ ACTT: 2043.7 ACTL: 1154
5-2-14	1999.0	1999.0	2383	C/W 67C Engine 900HR Insp. 811TA - ACTT: 2067.8
5-4-14	2005.0	2005.0	2386	C/W 67C Replace Top 4 Fuel 811TA - ACTT: 2073.8
5-26-14	2051.5	2051.5	2413	C/W 67C Eng oil filter @ ACTT: 2120.3; ACTF: 2582
5-29-14	2066.9	2066.9	2419	C/W P&WC SB41030 @ ACTT: 2135.7;
7-18-14	2141.0	2141.0	2483	C/W P&WC SB41030 @ ACTT: 2209.8;
8-21-2014	2204.8	2204.8	2525	C/W PT6C-67C P3 Screen Insp. N811TA - ACTT: 2273.6
9-12-2014	2233.9	2233.9	2542	C/W - P&WC SB41030 @ ACTT: 2302.7;
11-11-14	2288.8	2288.8	2572	C/W 67C Replace Top 4 Fuel Nozzles; C/W 67C Replace All Fuel Nozzles, 811TA - ACTT: 2357.6

	Signature	AME ACA/AMO SCA/AMO
@ ACTT: 1802.3 ACTC: 1014 ACTF: 2170 4S#085168	Lisa Stan	U06A290C
ACTT: 1840.3 ACTC. 1035 ACTF: 2228 4/S 158112	Lisa Stan	U06A290C
ACTT: 1951.7 ACTC. 1096 ACTF. 2364 1/S 158159	Lisa Stan	U06A290C
ACTC: 1111; ACTF: 2397; N81ITA; 4/S 113169	[illegible]	U06A290C
P/n: 540-1920-5; S/n: XMA330; @ACTT: 1982.4; ACTC: 1113;	[illegible]	U06A290C
ACTF: 2481 1/S 111405	Lisa Stan	U06A290C
ACTC: 1171 ACTF: 2510 1/S 111417	Lisa Stan	U06A290C
Nozzles		
ACTC: 1174 ACTF: 2522 1/S 111419	Lisa Stan	U06A290C
ACTC: 1201; 4/S 511666; N81ITA.	[illegible]	U06A290C
ACTC: 1207; ACTF: 2599; N81ITA; 4/S 151169	[illegible]	U06A290C
ACTC: 1271; ACTF: 2675; 4/S 142536	[illegible]	U06A290C
on Bleed Valve SN: XMA330 @ Part TT-2204.8		
ACTC: 1313 ACTF: 2784 4S# 155964	M. Rollins	U06A290C
ACTC: 1330; ACTF: 2824; N81ITA; 4S# 155981	Lisa Bate	U06A290C
13, 14 in 2	Lisa Stan	U06A290C
Replaced 7(ea) p/n. 3073974-01 in 7(ea) p/n. 3073970-01		
ACTC: 1360 ACTF: 2891 ; 4/S # 164116		

CONFIDENTIAL – SUBJECT TO PROTECTIVE ORDER BRISTOW 011007

Section 1: Record of engine maintenance and elementary work

Date --/--/--	Time since new	Time since overhaul	Total cycles	Details of task
11-13-2014	2319.2	2319.2	2590	* P&WC SB 41030
				* 67C Eng. Ignition Insp.
				* FCOC Detailed Insp. S/N: WA11157;
				N811TA @ ACTT: 2388.0;
1-9-2015	2334.6	2334.6	2607	C/W- 67C Eng. Oil filter
				N811TA
2-11-2015	2410.2	2410.2	2652	C/W - P&WC SB 41030 @ ACTT: 2479;
3-10-2015	2425.5	2425.5	2664	C/W SB41030
				C/W 900 hr. Inspection
				C/W Engine Oil Filter
				N811TA - ACTT: 2494.3
6-19-15	2517.1	2517.1	2712	C/W P&WC SB41030 @ ACTT: 2585.9
7-23-15	2611.3	2611.3	2755	C/W 67C TOP 4 Replace Fuel Nozzles
				ACTT: 3349; N811TA, L/S/MM
7-23-15	2611.3	2611.3	2755	C/W P&WC SB41030 @ ACTT: 2680.1; ACTC
8-20-15	2701.1	2701.1	2795	C/W P&WC SB41030 @ ACTT 2769.9,
9-20-15	2790.3	2790.3	2837	C/W P&WC SB41030 @ 2859.1-ACTT;
10-21-15	2880.0	2880.0	2882	C/W P&WC SB41030 @ ACTT: 2948.8;
Late Entry.				
10-18-15	2871.9	2871.9	2878.	C/W 67C Top 4 Fuel Nozzle; 13, 14, 1, 2
				C/W 67C Replace All Fuel Nozzles; Torch Pin
				N811TA - ACTT: 2940.7; ACTC;
11-25-15	2970.6	2970.6	2926.	C/W P&WC SB41030 @ ACTT: 3039.4

	Signature	AME ACA/AMO SCA/AMO
P/N: 108458@PartTT: 2319.2 ACTC: 1378; ACTF: 2988 ; 4S# 164184	Gia Bate	U0GA290L
@ACTT: 2403.4 ACTC: 1395 ACTF: 3033 4S# 164209	Gia Bate	U0GA290L
ACTC: 1440; ACTF: 3125; N811TA; 4S# 127460	Gia Bate	U0GA290L
Inspection ACTC: 1452 ACTF: 3147; VP-000283-2015	M. Pattison	U0GA290L
ACTC: 1500; ACTF: 3249; L/S 174067; N811TA	[illegible]	U0GA290L
13, 14, 152 @ACTT: 2680.1; ACTC: 1543;	[illegible]	U0GA290L
; 1543.; ACTF: 3349; L/S 174104; N811TA	Renie Welch	U0GA290L
ACTC: 1583, ACTF: 3443, N811TA 4S 134236	Renie Welch	U0GA290L
ACTC, 1625 -, ACTF: 3527, N811TA 4S# 134272	Renie Welch	U0GA290L
ACTC: 1670; ACTF: 3618; N811TA, 4S# 192684	Renie Welch	U0GA290L
(3073976-01) & (3073974-01) 1666; ACTF: 3612 ; L/S# 192679	Renie Welch	U0GA290L
; ACTC: 1714, ACTF: 3710, N811TA 4S# 134461	Renie Welch	U0GA290L

CONFIDENTIAL – SUBJECT TO PROTECTIVE ORDER BRISTOW 011009

Section 1: Record of engine maintenance and elementary work

Date --/--/--	Time since new	Time since overhaul	Total cycles	Details of task
12-25-15	~~4213~~ 3023	3062.3	2969	C/W P&WC SB41030, N811TA -
06-20-2016	3142.6	3142.6		C/W 67C Remplace top 4 fuel Nozzl
				N811TA - ACTT: 3211.4 ACTC. 1789
2-12-18	3431.0	3431.0	3174	C/W-67C Replace Top 4 Fuel Nozzles
				C/W-67C Replace All Fuel Nozzles
				N811TA - @ ACTT 3499.8
5-29-18	3718.9	3718.9	3304	C/W - 67C Replace Top 4 Fuel
				811TA. @ ACTT 3787.7
9-14-18	4008.2	4008.2	3422	C/W 67C Replace Top 4 Fuel Nozzles
				C/W 67C Replace lower 10 Fuel
				N811TA @ ACTT: 4077.0
1-15-19	4294.6	4294.6	3554.	C/W-67C Replace Top 4 Fuel
				N811TA @ ACTT: 4363.4
6-26-19	4538.5	4538.5	3681	Removed Bleed Valve
				Installed Bleed Valve
				N811TA ACTT: 4607.3
7-10-19	4577.5	4577.5	3718	C/W - 67C Replace Top 4
				N811TA ACTT: 4646.3
				P&WC SB41048 is not applicable by part number
7-22-19	4614.3		3710	torque sensor installed. UOGA290L
7-17-19	4601.6	4601.6	3743	C/W - 67C Replace
				inspect fuel manifold
				N811TA ACTT: 4670.4

	Signature	AME ACA/AMO SCA/AMO
ACTT: 3131.1 ACTC: 1757 ACTF: 3805; L/S. 1344861		
13, 14, 1, 2		
ACTF: 3888 L/S: 211241	SICHER	2527336F
- 13, 14, 1 & 2.		
Replace. 7 (ea) P/N. 3073974-01 & P/N 3073976-01		
ACTC. 1962, ACTF: 4175. L/S# 2777625.	R Welch	UEGA290L
Nozzles - 13, 14, 1 & 2. L/S# 2805666.	R Welch	UEGA290L
ACTC. 2092, ACTF: 4464.		
13, 14, 1 & 2.		
Nozzles. 5 (ea) P/N: 3073974-01 & P/N: 3073976-01		
ACTF: 4744. L/S# 282192.	R Welch	UEGA290L
Nozzles, 13, 14, 1 & 2 L/S 281349		
ACTC: 2342., ACTF: 5044.	R Welch	UEGA290L
P.N. 540-1920-5 SN-XMA330; fails Test		
P.N. 540-1920-5 SN-2217; TSO- 0.0		
ACTC-2469, ACTF-5326 L/S 3017337	K. Howard	UEGA290L
Fuel Nozzles 13, 14, 1 + 2		
ACTC: 2487., ACTF: 5363 L/S 3017591	K. Howard	UEGA290L
		UEGA290L
All Fuel Nozzles and L/S 3017600		
ACTC: 2498 ACTF: 5388	K. Howard	UEGA290L

CONFIDENTIAL – SUBJECT TO PROTECTIVE ORDER BRISTOW 011011

Section 1: Record of engine maintenance and elementary work

Date -- / -- / --	Time since new	Time since overhaul	Total cycles	Details of task
12.9.19	4991.9	4991.9	3913	Remove Engine S/n: N811TA @ ACTT: 5060.7

Registre de maintenance
Maintenance Log
Centre de service révision - St-Hubert
Service centre St-Hubert

Pratt & Whitney Canada
Une société de United Technologies / A United Technologies Company

Pratt & Whitney Canada Corp.
SERVICE CENTER ST-HUBERT
7007 de la savane
St-Hubert, Québec,
Canada J3Y 3X7

P&WC 11501 -7 (2019-04)

Fabricant - Manufacturer:	Désignation - Description:		Modèle - Model	No de série - Serial No:
PRATT & WHITNEY CANADA	TURBOSHAFT POWER SECTION MODULE		PT6C-67C	PS- KB0163
Bon de vente - Sale order:	**TSN**	**CSN**	**SSN**	**FSN**
216894	4991.9	N/A	N/A	N/A
Travail effectué - Work performed:	**TSO**	**CSO**	**SSO**	**FSO**
OVERHAULED	0.0	N/A	N/A	N/A

THIS POWER SECTION MODULE HAS BEEN OVERHAULED, MODIFIED, TESTED AND PROCESSED IN A/W PT6C-67C OVERHAUL MANUAL REV. 15, APPROVED DATA AND SPECIFICATION NO. G-PT6 ALL REV. 2.1.

- ALL CANADIAN A.D.'S WERE VERIFIED.
- MATED, TESTED AND SHIPPED WITH GAS GENERATOR MODULE S/N: PCE-KB0163.
- TEST RUN PERFORMED AND FOUND SATISFACTORY.

C.T. VANE AREA: 6.83 P.T. VANE AREA: 22.60 CAVITY: 2S2
TORQUE TRIM SLOPE: 1.018 TORQUE TRIM DATUM: -6.30

EXPORT CONTROL CLASSIFICATION : THIS DOCUMENT CONTAINS NO TECHNICAL DATA

2020-05-07		Marc-André Poitras PWC AMO 20-00 (AI 2)
Date (YY-MM-DD)	**Vérificateur autorisé** **Authorized Inspector**	**T.C AMO No 20-00**

7-8-2020	4991.9	0.0	3913	Inst. Engine Assy on ACTT: 5437.0 ACTC: 2831 * Power section module

	Signature	AME ACA/AMO SCA/AMO
KB0163 from 811TA 4/s 3001273		
ACTC: 21668 ACTF: 5761	K. Howard	110GA2902
NS11TA, L/H side		
ACTF: 6176 VP-000532-2020	M. Robbins	110GA2902
converted from Build Spec BS1019 to BS963		

CONFIDENTIAL – SUBJECT TO PROTECTIVE ORDER BRISTOW 011013

Section 1: Record of engine maintenance and elementary work

Date --/--/--	Time since new	Time since overhaul	Total cycles	Details of task
1-14-21	5268.7	276.8	4050	C/W - 67 Eng Oil Filter Insp.
				N811TA @ ACTT: 5713.8,
1-18-21	5278.2	286.3	4055	C/W - 67C P2.8 Check VLV Insp.
				C/W - 67C Comp Rotor Insp.
				C/W - 67C P3 Screen Insp. SN:
				N811TA @ ACTT: 5723.3,
2-25-21	5406.7	414.8	4127	C/W - 67C Engine Oil Filter Insp.
				N811TA @ ACTT: 5851.8, ACTC: 3078.,
3-31-21	5509.6	517.7	4186	C/W - 67C ENGINE OIL FILTER
				N811TA @ ACTT: 5954.7, ACTC:
5-2-21	5568.1	576.2	4230	C/W - 67C P2.8 Check VLV Insp.
				C/W - 67C Comp Rotor Insp.
				C/W - 67C P3 Screen - SN 2217
				811TA @ ACTT: 6013.2, ACTC: 3180,
5-5-21	5587.5	595.6	4239	C/W - 67C Replace All Fuel Nozzles
				67C Eng Ignition Insp.
				C/W - FCOC Detailed Insp.
				N811TA @ ACTT: 6032,
5-24-21	5649.4	657.7	4274	C/W - 67C Eng oil Filter Insp.
				C/W - 67C Inspection
				N811TA @ ACTT: 6094.7,
7-6-21	5785.8	793.9	4351	C/W - 67C Comp Rotor Insp.
				811TA @ ACTT: 6230.9,
7-7-21	5791.9	800.	4354	C/W - 67C Eng oil Filter Insp.
				N811TA @ ACTT: 6230.9,

	Signature	AME ACA/AMO SCA/AMO
4s 3027562.		
ACTC: 3001, ACTF: 6460	[illegible]	[illegible]
2217 @ PTT: 5208.7		
ACTC: 3006, ACTF: 6470	[illegible]	[illegible]
4s 3028330		
ACTF: 6610.	[illegible]	[illegible]
INSPECTION 4s 3028371		
3137, ACTF: 6722	[illegible]	[illegible]
4s 3053543		
P/N 540-1920-5 @ PTT: 5298.6		
ACTF: 6802	[illegible]	[illegible]
4s 3053547		
S/N WA59863, P/N 10845B @ TSN 595.6		
ACTC: 3190, ACTF: 6856	[illegible]	[illegible]
4s 3053572		
ACTC 3225, ACTF: 6911.	[illegible]	[illegible]
4s 3056747		
ACTC: 3302, ACTF: 7083.	[illegible]	[illegible]
4s 3056748		
ACTC: 3302, ACTF: 7083.	[illegible]	[illegible]

CONFIDENTIAL – SUBJECT TO PROTECTIVE ORDER BRISTOW 011015

Section 1: Record of engine maintenance and elementary work

Date --/--/--	Time since new	Time since overhaul	Total cycles	Details of task
8-19-21	5860.3	368.4	4390	C/O PT6C-67C P0.8 CHECK
				C/O PT6C-67C P3 SCREEN INSP.
				4S 3007459 N811TA@ ACTT:
9-9-21	5934.4	942.5	4448.	C/O-67C Eng Oil Filter Insp.
				N811TA @ ACTT: 6379.5
11-2-21	6077.0	1085.1	4556.	C/O-67C Eng Oil Filter Insp.
				C/O-67C Comp Rotor Insp.
				N811TA @ ACTT: 6522.1
11-20-21	6149.8	1157.9	4617.	C/O-67C P2.8 Check VLV Insp
				C/O-67C P3 Screen.
				N811TA @ ACTT: 6594.9
12-11-21	6218.3	1226.4	4673.	C/O 67C Eng Oil Filter Insp.
				N811TA @ ACTT: 6663.4
Late Entry 11-28-21	6178.3	1226.4	4638.	C/O-67C Eng Ignition Insp.
				N811TA @ ACTT: 6623.4
12-11-21	6218.3	1266.4	4673.	C/O-67C Eng Oil Filter Insp.
				N811TA @ ACTT: 6663.4
12-16-21	6242.0	1290.1	4692.	C/O-67C Replace All Fuel Nozzles
				N811TA @ ACTT: 6687.3
1-27-22	6359.6	1407.7	4779.	C/O-67C Eng Oil Filter Insp.
				N811TA @ ACTT: 6804.7
1-30-22.	6370.0	1418.1	4785	C/O-67C Comp Rotor Insp.
				N811TA @ ACTT: 6815.1

	Signature	AME ACA/AMO SCA/AMO
V-V INSP.		
P.N. 840-1980-5, SN. 2217 @ PTT: 5590.8		
6305.4; ACTC: 3341, ACTF: 7175	[illegible]	[illegible]
US 3007481		
ACTC: 3341, ACTF: 7265.	[illegible]	[illegible]
US 3087098		
ACTC: 3507, ACTF: 7471.	[illegible]	[illegible]
US 3063421		
SN 2217		
ACTC: 3568, ACTF: 7573.	[illegible]	[illegible]
US 3063443	[illegible]	[illegible]
ACTC: 3624, ACTF: 7675.		
US 3063431 & FCOC Detail Insp. SIN WA 59863		
ACTC 3589, ACTF: 7611.	[illegible]	[illegible]
US 3063443		
ACTC. 3624, ACTF: 7675.	[illegible]	[illegible]
US 3063448		
ACTC: 3643, ACTF: 7708	[illegible]	[illegible]
US 3063497		
ACTC: 3730, ACTF: 7868.	[illegible]	[illegible]
US 3063503		
ACTC: 3736, ACTF: 7881	[illegible]	[illegible]

CONFIDENTIAL – SUBJECT TO PROTECTIVE ORDER BRISTOW 011017

Section 1: Record of engine maintenance and elementary work

Date --/--/--	Time since new	Time since overhaul	Total cycles	Details of task
2-17-22	6443.2	1451.3	4824.	C/W - 67C P3 Screen - SN 2214
				C/W - 67C P2.8 Check Vlv Insp.
				N811TA @ ACTT: 6888.3
3-15-22	6499.3	1507.4	4854	C/W - 67C ENGINE OIL FILTER
				N811TA @ ACTT: 6944.4 ; ACTC:
5-4-22	6643.6	1651.7	4938.	C/W - 67C Eng oil Insp.
				N811TA @ ACTT: 7088.7
5-10-22	6660.2	1668.3	4947	C/W - 67C Comp Rotor Insp.
				N811TA @ ACTT: 7105.3
6-10-22	6736.5	1744.6	4995.	C/W - 67C P2.8 Check Vlv Insp.
				811TA @ ACTT: 7181.6
				C/W - P3 Screen SN: 2217
6-21-22	6770.9	1779.0	5013.	C/W - 67C Eng Ignition Insp.
				C/W - FCOC Detail Insp. SN: WA
				N811TA. @ ACTT: 7216.0
6-27-22.	6784.0	1792.1	5020.	C/W - 67C Eng Oil Filter Insp.
				N811TA @ ACTT: 7229.1
7-8-22	6818.3	1826.4	5039.	C/W - 67C Replace All Fuel Nozzles
				N811TA @ ACTT: 7263.4 , ACTC.
8-13-22.	6919.0	1927.1	5095.	C/W - 67C Eng oil Filter Insp.
				N811TA @ ACTT: 7364.1
8-25-22.	6948.9	1957.0	5112.	C/W - 67C Comp Rotor Insp.
				N811TA @ ACTT: 7394.0

	Signature	AME ACA/AMO SCA/AMO
PN 540-1920-5 @ TSN: 6173.1 , 45 3063528		
ACTC: 3775 , ACTF: 7985.	Pedelek	UOCA290C
45 3043733		
3805 , ACTF: 8053	[illegible]	UOCA290C
45 3034081		
ACTC: 3889 , ACTF: 8250.	Pedelek	UOCA290C
45 3034088		
ACTC: 3898. , ACTF: 8273	Pedelek	UOCA290C
45 3044128		
ACTC: 3946. , ACTF: 8371.	Pedelek	UOCA290C
PN: 540-1920-5	Pedelek	UOCA290C
45 3018961		
59863.		
ACTC: 3964. , ACTF: 8411.	Pedelek	UOCA290C
45 3018972		
ACTC: 3971. ACTF: 8427.	Pedelek	UOCA290C
45 3018985		
3990. , ACTF: 8470.	Pedelek	UOCA290C
45 3115089.		
ACTC: 4046. , ACTF: 8596.	Pedelek	UOCA290C
45 3115106.		
, ACTC: 4063. , ACTF: 8638	Pedelek	UOCA290C

CONFIDENTIAL – SUBJECT TO PROTECTIVE ORDER BRISTOW 011019

Section 1: Record of engine maintenance and elementary work

Date --/--/--	Time since new	Time since overhaul	Total cycles	Details of task
9-17-22.	7027.6	2035.7	5155.	C/W - 67C P2.8 Check VLV Insp.
				C/W - 67C P3 Screen SN: 2217,
				N811TA @ ACTT: 7472.7 ,

	Signature	AME ACA/AMO SCA/AMO
453115136.		
PN: 540-1920-5 @ TSN: 6758.1		
ACTC 4106. , ACTF: 8736.	[illegible]	[illegible]

CONFIDENTIAL – SUBJECT TO PROTECTIVE ORDER BRISTOW 011021

Section 2: Record of engine installations

Installation						Removal		
Aircraft registration	Date installed -- / -- / --	Position	Engine time since new[2]	Engine time since overhaul[2]	Aircraft time at installation	Date removed -- / -- / --	Aircraft time at removal	Engine hours this installation[2]
N813DG	10-27-06	#2	0.0	new	607.9	8-22-13	2341.4	1733.5
N811TA	12-18-13	#2	1733.5	1733.5	1802.3	12.9.19	5060.7	3258.4
N811TA	7-8-20	#1	4991.9	0.0	5437.0			

[2] Where engine time is requested, enter the engine time and/or engine cycles, as applicable.

Removal (cont'd)

Engine time since new[2]	Engine time since overhaul[2]	Reason for removal	Entered by (print)
1733.5	1733.5	Over speed greater than 103%; Torque above 80%	Meagan Robbins
4991.9	4991.9	Due Overhaul	K. Howard

CONFIDENTIAL – SUBJECT TO PROTECTIVE ORDER BRISTOW 011023

Section 3: Records of engine component installations

Date installed - - / - - / - -	Engine time since overhaul	Total cycles	Component description	Type/Model/Series/ Part Number
6·26·19	4538.5	3681	Bleed Valve	540-1920-5

Serial Number	Position	Date removed --/--/--	Reason for removal	Entered by (print)
2217	—			

CONFIDENTIAL – SUBJECT TO PROTECTIVE ORDER BRISTOW 011025

Section 5: Record of engine major modifications and repairs, and supplemental Instructions for Continued Airworthiness (ICA)

Date embodied -- / -- / --	STC/RDA/PDA	Description of changes	ICA (Y/N)
DEC 03 2013	—	Refer to Attached Mod Listing	
06 APR 2020	—	Refer to Attached Mod Listing	—

Sched. change (Y/N)	Description of changes to ICA and reference to applicable documents	Entered by (print)
		Lloyd Moore PWC AMO 20-00 AI 63
		Gilles Goudreau PWC AMO 20-00 AI 91

CONFIDENTIAL – SUBJECT TO PROTECTIVE ORDER BRISTOW 011027

Accumulated LCF Weekly Record Sheet

Engine Model: PT6C-67C

Engine Serial Number:

PCE-KB0163 (#1)

DATE	TSO/TSN	IMP. CYCLES	CT CYCLES	PT CYCLES
12-11-21	6218.3	5092.6689	4100.1311	6525.8808
12-20-21	6252.9	5119.9419	4125.3264	6561.6075
12-29-21	6280.1	5144.8305	4144.8809	6590.8389
1-13-22	6325.0	5180.8062	4174.2883	6633.1665
1-29-22	6366.6	5212.2991	4198.5668	6668.9721
2-7-22	6400.7	5234.1702	4216.3778	6695.4341
2-17-22	6443.2	5267.4487	4240.7573	6729.4468
3-10-22	6484.6	5291.9359	4263.9113	6762.0169
3-24-22	6526.8	5316.6973	4287.9797	6792.7372
4-10-22	6569.7	5342.1420	4312.4122	6824.4414
4-13-22	6583.8	5347.2234	4317.4747	6830.2449
4-26-22	6621.1	5374.7838	4346.1113	6865.4289
5-13-22	6661.9	5401.6792	4371.8852	6899.4558
6-1-22	6702.8	5431.3062	4399.8964	6935.6246
6-12-22	6742.0	5463.9174	4429.5656	6973.4559
6-23-22	6778.3	5489.1977	4454.0021	7000.7146
7-8-22	6818.3	5516.4153	4481.0125	7033.2130
7-24-22	6858.4	5546.2248	4509.3644	7067.4013
8-5-22	6903.5	5578.8488	4540.1453	7102.9784
8-24-22	6945.6	5610.0782	4569.5829	7140.6365
9-7-22	6988.1	5640.4269	4598.3159	7174.9349

DATE	TSO/TSN	IMP. CYCLES	CT CYCLES	PT CYCLES

Accumulated LCF Weekly Record Sheet

Engine Model: PT6C-67C

Engine Serial Number:

PCE-KB0163 (#~~2~~)1

DATE	TSO/TSN	IMP. CYCLES	CT CYCLES	PT CYCLES
9-21-18	4027.8	3628.4409	2785.7844	4653.3313
10-31-18	4073.2	3656.2357	2807.3191	4686.8074
11-17-18	4113.6	3682.1585	2826.6601	4716.3604
11-26-18	4156.4	3704.3661	2845.3749	4740.2643
12-6-18	4188.1	3723.8141	2859.8922	4765.8075
12-25-18	4228.3	3752.0392	2882.2068	4800.7773
1-8-19	4271.5	3781.6523	2907.0235	4838.5260
1-21-19	4307.1	3808.0497	2931.0963	4873.1555
3-26-19	4346.8	3841.3617	2956.0105	4914.8603
4-22-19	4390.6	3874.6447	2980.2945	4952.1242
5-5-19	4427.2	3895.8223	2998.5733	4978.8654
5-20-19	4473.7	3928.3484	3024.9192	5011.6275
6-6-19	4513.9	3957.3279	3054.5173	5046.3892
7-1-19	4555.3	3988.2856	3087.7717	5090.7011
7-16-19	4595.9	4009.6865	3107.4665	5119.6987
7-31-19	4641.5	4032.7803	3127.3193	5744.2917
8-14-19	4684.2	4055.9883	3145.0512	5170.9199
8-28-19	4721.3	4084.0966	3167.7606	5204.4775
9-11-19	4762.9	4107.5442	3188.8273	5235.1387
9-28-19	4804.6	4132.8799	3211.2201	5266.3767
10-13-19	4844.8	4158.6798	3232.2077	5296.2848
11-6-19	4885.3	4168.1891	3252.8605	5329.7346
11-19-19	4928.2	4211.5483	3272.4550	5360.6277
12-2-19	4972.9	4237.3232	3293.1007	5392.6750
10-11-20	5033.3	4280.7370	3339.1058	5458.5288
10-23-20	5070.	4301.2739	3360.2670	5489.0841

DATE	TSO/TSN	IMP. CYCLES	CT CYCLES	PT CYCLES
11-8-20	5111.3	4326.5279	3385.8675	5522.3735
12-2-20	5153.0	4355.6109	3409.0181	5560.5740
12-17-20	5197.5	4387.5712	3432.9763	5601.2882
1-6-21	5241.5	4414.5155	3457.8063	5643.8431
1-18-21	5278.2	4440.8492	3476.7499	5674.2176
1-29-21	5317.6	4461.5771	3498.4716	5704.8763
2-11-21	5359.8	4486.3377	3522.9973	5735.7569
2-24-21	5403.	4518.6783	3546.5598	5772.9585
3-7-21	5444.6	4542.8022	3570.2180	5805.8858
3-18-21	5483.7	4564.4404	3591.4789	5833.5795
4-5-21	5519.7	4592.3814	3616.2523	5871.7892
4-29-21	5559.9	4622.7125	3647.5235	5914.0110
5-10-21	5601.5	4648.7029	3671.8110	5948.4706
5-22-21	5640.7	4672.2439	3692.6555	5976.1792
6-2-21	5678.4	4699.2407	3719.4932	6013.5474
6-13-21	5716.3	4721.8337	3741.7876	6041.9339
6-27-21	5758.8	4748.0359	3767.9041	6077.9690
7-9-21	5799.2	4773.1354	3792.1241	6109.4803
8-14-21	5838.5	4798.1267	3816.4919	6140.5363
8-27-21	5880.1	4819.5447	3836.3253	6165.8891
9-16-21	5921.4	4848.5255	3866.9289	6201.9394
9-17-21	5964.7	4880.6447	3899.6053	6246.7289
10-3-21	6005.8	4912.2800	3930.5168	6286.6952
10-15-21	6048.7	4948.3366	3967.1968	6333.1453
11-7-21	6092.9	4992.8324	4008.9391	6400.1258
11-16-21	6133.5	5025.9993	4037.8889	6439.3683
11-26-21	6178.3	5058.1968	4067.1270	6481.4652

Accumulated LCF Weekly Record Sheet

Engine Model: PT6C-67C

Engine Serial Number:

PCE-KB0163 (#2)

DATE	TSO/TSN	IMP. CYCLES	CT CYCLES	PT CYCLES
1-23-14	1791.4	2051.5966	1395.2801	2597.7870
2-10-14	1831.5	2074.9511	1415.9874	2631.1454
3-1-14	1871.1	2100.1215	1437.1517	2663.3625
3-13-14	1911.3	~~[illegible]~~ 2123.2734	1460.0738	2702.5533
4-9-14	1955.5	2160.0847	1494.0535	2761.3582
4-28-14	1994	2188.3146	1523.5551	2805.4891
5-21-14	2034.3	2220.7319	1554.9555	2857.6568
5-31-14	2068.9	2245.8252	1577.4304	2891.7738
6-18-14	2108.9	2273.7726	1605.5368	2934.5284
7-24-14	2152.6	2319.2361	1649.6059	3002.1273
8-13-14	2191.6	2358.9854	1691.2514	3061.9652
9-12-14	2233.9	2392.4646	1724.5728	3109.7082
10-1-14	2274.4	2420.993	1752.9030	3149.4522
11-10-14	2314.7	2453.4864	1778.7869	3184.5124
1-21-15	2356.4	2494.8786	1817.5756	3244.1705
2-8-15	2398.9	2525.1611	1845.2222	3284.1877
5-6-15	2425.5	2547.6687	1866.9378	3312.5323
6-1-15	2467.5	2581.8562	1897.5339	3360.2847
6-17-15	2509.3	2606.3369	1921.1943	3395.1182
7-2-15	2541.5	2629.5990	1943.3611	3424.5229
7-20-15	2594.0	2656.8298	1969.2612	3459.1995
7-30-15	2632.8	2684.1777	1992.5362	3488.7487
8-12-15	2674	2708.9982	2015.6087	3516.2552
8-22-15	2705.8	2726.5987	2031.6915	3540.0310
9-4-15	2747.7	2750.0249	2054.4840	3571.6315
9-17-15	2786.9	2769.5686	2074.9133	3601.7126
10-1-15	2826.9	2795.4308	2098.6495	3635.1942

DATE	TSO/TSN	IMP. CYCLES	CT CYCLES	PT CYCLES
10-14-15	2871.9	2822.9036	2125.4493	3674.3364
11-2-15	2914.0	2847.6770	2148.5456	3709.1649
~~11-22-15~~	~~[illegible]~~			
11-22-15	2953.3	2878.4915	2172.5181	3742.5720
12-3-15	2994.6	2910.5182	2194.3977	3773.4013
12-15-15	3009.3	2935.2417	2215.6387	3804.7243
12-27-15	3068.9	2955.2009	2231.9870	3830.0271
1-13-16	3110.4	2981.3342	2250.4626	3859.9260
12-13-17	3249.0	3112.2148	2373.6000	4043.0415
12-28-17	3290.3	3141.0074	2398.8414	4085.6818
1-10-18	3330.2	3163.4586	2418.1075	4118.6561
1-25-18	3374.9	3191.1710	2439.6255	4152.9762
2-8-18	3420.2	3219.4838	2461.1294	4185.2325
2-21-18	3460.5	3245.2294	2481.4070	4215.9293
3-6-18	3502.7	3275.2705	2503.8828	4247.7612
3-22-18	3543.0	3301.9236	2525.2715	4276.1326
4-4-18	3585.6	3340.3918	2556.4094	4320.6690
4-28-18	3627.5	3373.8723	2580.9308	4361.0004
5-13-18	3666.5	3405.2432	2604.5624	4395.4419
5-25-18	3708.1	3429.1664	2623.1459	4422.3116
6-10-18	3751.3	3459.9793	2647.0918	4456.3078
6-26-18	3793.7	3485.8811	2667.8358	4485.8663
7-12-18	3830.8	3510.8913	2688.4236	4515.3008
7-24-18	3870.3	3534.1869	2707.5330	4542.7089
8-8-18	2660.0	3559.4071	2727.5815	4569.6102
8-27-18		3583.4085	2748.1563	4600.9410
9-8-18	3989.6	3604.6432	2764.9254	4625.9916

Accumulated LCF Weekly Record Sheet
P&WC 5715 (05-99)
Engine Model KB0163

Turbomachine Serial NO. #2

Date	Engine TT TSO/TSN	Impeller Cycles	CT Cycles	PT Cycles
11.8.06	20.7	15.8796	14.3022	19.0309
12.22.06	67.2	56.6524	38.6597	53.2197
1.23.07	110.4	91.8145	63.4050	87.8802
2.17.07	152.3	133.1175	95.9590	227.7611
4.7.07				
6.15.07				
7.4.07	221.9	193.0000	148.0000	209.0000
10.3.07	254.2	224.513	171.7146	254.0518
7.25.09	549.7	553.5070	393.0374	634.5507
12.21.09	866.9	894.9638	623.6274	1069.9689
1.15.10	909.7	943.7115	646.3999	1128.3380
2.8.10	949.9	990.7988	669.7456	1185.4973
5.1.10	978.9	1019.7732	685.3413	1221.3401
7.21.10	1109.3	1154.5673	795.0703	1409.7072
8.8.10	1125.9	1174.7830	813.0486	1438.3209
8.29.10	1141.9	1193.7792	828.4128	1463.5413
9.11.10	1157.8	1211.4463	843.8386	1491.1045
10.31.10	1194.8	1258.6656	876.6084	1553.5008
11.27.10	1211.9	1282.7151	891.0278	1585.1009
12.10.10	1227.9	1304.5800	901.0706	1609.2227
12.25.10	1245.3	1329.7528	912.3459	1639.3661
1-10-11	1259.3	1343.7468	921.5647	1658.1249
1-29-11	1277.8	1367.6943	933.7356	1689.2336
2-12-11	1293.3	1387.6302	945.2146	1716.0379
2-23-11	1311.7	1410.6133	956.5962	1744.1553
3-1-11	1328.3	1431.1918	965.4558	1765.7359
5-28-11	1334.5	1435.7618	968.5857	1771.4071
6-5-11	1355.4	1459.1559	987.3657	1800.6534
6-16-11	1364.6	1462.3604	991.4871	1805.1727

Date	TSO/TSN	Impeller Cycles	CT Cycles	PT Cycles
1-14-14	1748.6	2023.5767	1373.8687	2561.2911

HELICOPTERS LLC
6300 Carl Brady Drive
Anchorage, AK 99502
907-550-8600

Era Repair Order	Part	Serial	Description	Removed from	Removal Date	Removal Remarks
RO245-016347-2013	3045379-01	PCE-KB0163	ENGINE, PT6C-67C	N813DG	8/22/2013	Oover speed greater than 103% & torque above 80%

Repair Order

Mail Invoices To :

ERA HELICOPTERS LLC
Attn: Accounts Payable,
P.O. Box 79459,
Houston, TX 77279-9459.

Repair Order # : RO245-016347-2013
Amendment # : 0

THIS NUMBER MUST APPEAR ON ALL INVOICES, PACKING SLIPS, PACKAGES & CORRESPONDENCE

Supplier : PRATT & WHITNEY CANADA
7007 Chemin De La Savane
St-Hubert, Quebec J3Y 3X7 CA

LYNN LAGAC? RPR ALL MODELS
Phone # : (450)468-7897
Fax # :

Ship To : ERA HELICOPTERS LLC
6300 Carl Brady Drive
ANCHORAGE, AK 99502 USA

Supplier #	RO Date	Ship By	F.O.B	Pay Term
7630-7630-S3	09/11/2013	AIR GROUP	ORIGIN	IMMEDIATE

Contact	Phone # / Ref Doc #	Quotation #	Approved By

Line #	Part # / Description	Serial # / Lot #	Due Date	Qty.	UOM	Repair Cost
1	3045379-01 / ENGINE, PT6C-67C	PCE-KB0163	11/01/2013	1	EA	

Generated On : 09/11/2013 17:45:00 Date & Time Format : MM/DD/YYYY HH24:MI:SS

CONFIDENTIAL – SUBJECT TO PROTECTIVE ORDER BRISTOW 011033

Maintenance Information Details

CONFIDENTIAL – SUBJECT TO PROTECTIVE ORDER BRISTOW 011034

Part # : 3045379-01	Part Desc : ENGINE, PT6C-67C	Serial # : PCE-KB0163

Component Details				Parameter Details (FH)			
Component ID	ENG-2954	Level Code		TSN	1733.5	TSI	17.6
EIPN Comp ID		Position Code		TSO	1733.5	TSR	1733.5

Task Details

Work unit # / Work Unit Desc	Maintenance Type / Ref Document #	LPD / LPV	Current Value	Calender Interval / Usage Interval	Remaining Value
-67C ENG 900 HR	Inspection	05/16/2013	1733.5 HR	12 Month End	262 Days, 841.8
900 Hour Engine Inspection		1675.3 HR		900 HR	
-67C ENG IGNITION INSP	Inspection	10/08/2010	1733.5 HR		47.05000001
Visualy Inspect Ignition Cable and Ignitor Plugs IAW PW&C IETM.		1180.55 HR		600 HR	
-67C ENG O/H	Overhaul		1733.5 HR		3266.5
Engine Overhaul				5000 HR	
-67C ENG OIL FILTER	Inspection	12/07/2012	1733.5 HR		41.5
Engine Oil Filter Inspection		1625 HR		150 HR	
-67C REPLACE ALL FUEL NOZZLES	Inspection	07/20/2013	1733.5 HR		582.4
Replace all Engine Fuel Nozzles and inspect fuel manifold.		1715.9 HR		600 HR	
-67C REPLACE TOP 4 FUEL NOZZLE	Inspection	12/07/2012	1733.5 HR		191.5
Replace top 4 Engine Fuel Nozzles : 13, 14, 1 and 2 as shown on PWC PT6C-67C MM 73-10-05 FIGURE 202.		1625 HR		300 HR	
AD2013-03-14(F)(2)	Others		1733.5 HR 2484.91 CYCLES		294.6 296.9503
Power Turbine (PT) Baffle Retaining Ring Inspection.				600 HR 900 CYCLES	
ASB A41053	Others	01/10/2011	1733.5 HR		
Inspection of fuel filter installation		1259.3 HR		1295.3 HR	
P&WC SB 41030	Others	03/19/2013	1733.5 HR		33.1

CONFIDENTIAL – SUBJECT TO PROTECTIVE ORDER BRISTOW 011035

Inspection of Check Valve Assembly IAW P&WC SB No 41030		1666.6 HR		100 HR	
P&WC SB 41056	Others				
Power Turbine Shaft housing assembly, No. 3 bearing seal runner and turbine shaft spacer, turbine exhaust duct - Replacement/Modification of.					
P&WC SB41035	Others	03/09/2010			
Replacement of Turboshaft Engine (T5)Thermocouple Wiring Harness.					
P&WC SB41050	Others	03/31/2011			
Replacement of fuel nozzle configuration and ecology system accumulator IAW SB41050.					
PWC SB A41060	Others	08/29/2011	1733.5 HR 2484.91 CYCLES		
Bore scope inspection of PT bearing cover retaining ring.		1428.1 HR 1881.86 CYCLES		HR CYCLES	

Part # : 540-1920-5 **Part Desc :** ELECTRONIC BLEED VALVE (67C) **Serial # :** XMA330

Component Details				Parameter Details (FH)			
Component ID	BLV-218	**Level Code**	1.1	**TSN**	1733.5	**TSI**	108.5
EIPN Comp ID		**Position Code**	ELECTRONIC BLEED VALVE	**TSO**	1733.5	**TSR**	1733.5

Task Details

Work unit # / Work Unit Desc	Maintenance Type / Ref Document #	LPD / LPV	Current Value	Calender Interval / Usage Interval	Remaining Value
-67C BLEED VLV O/H	Overhaul		1733.5 HR		3266.5
Electronic Bleed Valve Overhaul				5000 HR	
PT6C-67C P3 SCREEN	Inspection	12/07/2012	1733.5 HR		191.5
Clean and inspect the bleed valve P3 inlet screen		1625 HR		300 HR	

CONFIDENTIAL – SUBJECT TO PROTECTIVE ORDER BRISTOW 011036

Part # : 3054380-01	Part Desc : COMPRESSOR ROTOR STUB SHAFT	Serial # : PKAAA019011

Component Details				Parameter Details (FH)			
Component ID	SFT-902	Level Code	1.10	TSN	1733.5	TSI	1733.5
EIPN Comp ID		Position Code	COMP ROTOR STUB SHAFT	TSO	1733.5	TSR	1733.5

Task Details

Work unit #	Maintenance Type	LPD	Current Value	Calender Interval	Remaining Value
Work Unit Desc	Ref Document #	LPV		Usage Interval	
-67C C/R STUB-SHAFT RET	Retire		2840.66 CYCLES		17159.3444
Compressor Rotor Stub Shaft Retirement				20000 CYCLES	

Part # : 3055309-01	Part Desc : IMPELLER	Serial # : EAAA000N996

Component Details				Parameter Details (FH)			
Component ID	ENG-4153	Level Code	1.11	TSN	1733.5	TSI	1733.5
EIPN Comp ID		Position Code	CENTRIFUGAL IMPELLER	TSO	1733.5	TSR	1733.5

Task Details

Work unit #	Maintenance Type	LPD	Current Value	Calender Interval	Remaining Value
Work Unit Desc	Ref Document #	LPV		Usage Interval	
-67C IMP RET	Retire		2840.66 CYCLES		17159.3444
Centrifugal Impeller Retirement				20000 CYCLES	

Part # : 3058015-01	Part Desc : POWER TURBINE DISC	Serial # : A001Y0C9

Component Details				Parameter Details (FH)			
Component ID	ENG-4154	Level Code	1.12	TSN	1733.5	TSI	1733.5
EIPN Comp ID		Position Code	PT DISC ST 2	TSO	1733.5	TSR	1733.5

Task Details

Work unit #	Maintenance Type	LPD	Current Value	Calender Interval	Remaining Value
Work Unit Desc	Ref Document #	LPV		Usage Interval	
-67C PT DISC RET	Retire		3625.71 CYCLES		8374.2895
Power Turbine Disc Retirement				12000 CYCLES	

CONFIDENTIAL – SUBJECT TO PROTECTIVE ORDER BRISTOW 011037

Part # : 10845B	Part Desc : FUEL COOLED OIL COOLER	Serial # : WA11157

Component Details				Parameter Details (FH)			
Component ID	OCO-188	Level Code	1.13	TSN	597.06	TSI	
EIPN Comp ID		Position Code	FCOC	TSO		TSR	

Task Details

Work unit # / Work Unit Desc	Maintenance Type / Ref Document #	LPD / LPV	Current Value	Calender Interval / Usage Interval	Remaining Value
-67C OVERHAUL FCOC	Overhaul		597.06 HR		4902.94000001
Fuel Cooled Oil Cooler Overhaul				5500 HR	
FCOC DETAILED INSP	Inspection		597.06 HR		366.74000001
Inspect the Fuel Cooled Oil Cooler for condition, security and evidence of leaks.		363.8 HR		600 HR	

Part # : 32213-04	Part Desc : DATA COLLECTION UNIT (PT6C-67C)	Serial # : DP06-327

Component Details				Parameter Details (FH)			
Component ID	ENG-4146	Level Code	1.2	TSN	1733.5	TSI	1733.5
EIPN Comp ID		Position Code	DCU	TSO	1733.5	TSR	1733.5

Task Details

Work unit # / Work Unit Desc	Maintenance Type / Ref Document #	LPD / LPV	Current Value	Calender Interval / Usage Interval	Remaining Value
-67C DCU O/H	Overhaul		1733.5 HR		3266.5
Data Collection Unit Overhaul				5000 HR	

Part # : 8063-894	Part Desc : MODULE, FUEL MANAGEMENT (67C)	Serial # : 15062622

Component Details				Parameter Details (FH)			
Component ID	FCU-336	Level Code	1.3	TSN	2109.55	TSI	
EIPN Comp ID		Position Code	FUEL MANAGEMENT MODULE	TSO		TSR	

Task Details

Work unit # / Work Unit Desc	Maintenance Type / Ref Document #	LPD / LPV	Current Value	Calender Interval / Usage Interval	Remaining Value
-67C FMM O/H	Overhaul		2109.55 HR		3390.45000001
Fuel Management Module Overhaul				5500 HR	
P&WC SB41021	Others		2109.55 HR		390.40000001
Inspection of Fuel System IAW P&WC SB No 41021				HR	

CONFIDENTIAL – SUBJECT TO PROTECTIVE ORDER BRISTOW 011038

Part # : 3039001	Part Desc : ROTOR COMPRESSOR	Serial # : EAAA000P568

Component Details				Parameter Details (FH)			
Component ID	ENG-4147	Level Code	1.4	TSN	1733.5	TSI	1733.5
EIPN Comp ID		Position Code	1 ROTOR COMP	TSO	1733.5	TSR	1733.5

Task Details

Work unit # / Work Unit Desc	Maintenance Type / Ref Document #	LPD / LPV	Current Value	Calender Interval / Usage Interval	Remaining Value
-67C COMP ROT RET	Retire		2840.66 CYCLES		17159.3444
Compressor Rotor Retirement				20000 CYCLES	

Part # : 3040933	Part Desc : ROTOR COMPRESSOR	Serial # : EAAA000P879

Component Details				Parameter Details (FH)			
Component ID	ENG-4148	Level Code	1.5	TSN	1733.5	TSI	1733.5
EIPN Comp ID		Position Code	2 ROTOR COMP	TSO	1733.5	TSR	1733.5

Task Details

Work unit # / Work Unit Desc	Maintenance Type / Ref Document #	LPD / LPV	Current Value	Calender Interval / Usage Interval	Remaining Value
-67C COMP ROT RET	Retire		2840.66 CYCLES		17159.3444
Compressor Rotor Retirement				20000 CYCLES	

Part # : 3040944	Part Desc : ROTOR COMPRESSOR	Serial # : EAAA000P010

Component Details				Parameter Details (FH)			
Component ID	ENG-4149	Level Code	1.6	TSN	1733.5	TSI	1733.5
EIPN Comp ID		Position Code	3 ROTOR COMP	TSO	1733.5	TSR	1733.5

Task Details

Work unit # / Work Unit Desc	Maintenance Type / Ref Document #	LPD / LPV	Current Value	Calender Interval / Usage Interval	Remaining Value
-67C COMP ROT RET	Retire		2840.66 CYCLES		17159.3444
Compressor Rotor Retirement				20000 CYCLES	

CONFIDENTIAL – SUBJECT TO PROTECTIVE ORDER BRISTOW 011039

Part # : 3040952	Part Desc : ROTOR COMPRESSOR	Serial # : EAAA000H972

Component Details				Parameter Details (FH)			
Component ID	ENG-4150	Level Code	1.7	TSN	1733.5	TSI	1733.5
EIPN Comp ID		Position Code	4 ROTOR COMP	TSO	1733.5	TSR	1733.5

Task Details

Work unit # / Work Unit Desc	Maintenance Type / Ref Document #	LPD / LPV	Current Value	Calender Interval / Usage Interval	Remaining Value
-67C COMP ROT RET	Retire		2840.66 CYCLES		17159.3444
Compressor Rotor Retirement				20000 CYCLES	

Part # : 3045407-01	Part Desc : TURBINE DISC	Serial # : A001Y5HN

Component Details				Parameter Details (FH)			
Component ID	ENG-4151	Level Code	1.8	TSN	1733.5	TSI	1733.5
EIPN Comp ID		Position Code	PT DISC ST 1	TSO	1733.5	TSR	1733.5

Task Details

Work unit # / Work Unit Desc	Maintenance Type / Ref Document #	LPD / LPV	Current Value	Calender Interval / Usage Interval	Remaining Value
-67C PT DISC RET	Retire		3625.71 CYCLES		8374.2895
Power Turbine Disc Retirement				12000 CYCLES	

Part # : 3053496-01	Part Desc : COMPRESSOR DISC	Serial # : A001Y47T

Component Details				Parameter Details (FH)			
Component ID	ENG-4152	Level Code	1.9	TSN	1733.5	TSI	1733.5
EIPN Comp ID		Position Code	COMP TURBINE DISK	TSO	1733.5	TSR	1733.5

Task Details

Work unit # / Work Unit Desc	Maintenance Type / Ref Document #	LPD / LPV	Current Value	Calender Interval / Usage Interval	Remaining Value
-67C COMP TURB DISC RET	Retire		1915.15 CYCLES		10084.8519
Compressor Turbine Disc Retirement				12000 CYCLES	

CONFIDENTIAL – SUBJECT TO PROTECTIVE ORDER BRISTOW 011040

8130-3 REQUIRED

Please Inspect/Repair/Overhaul as required in accordance with Manufacturer's Manual and current Regulatory Requirements.

Removed from N813DG 8/22/2013. Over speed greater than 103% & torque above 80%. Please inspect and repair.

Please email quote with turn around time to roquotes@erahelicopters.com

Legends : **F.O.B- Free On Board, QTY-Quantity, UOM-Unit Of Measurement, EIPN-End Item Part Number, TSN- Time Since New, TSI-Time Since Inspection, TSO-Time Since Overhaul, TSR-Time Since Repair, LPD-Last Performed Date, LPV-Last Performed Value.**

THIS ORDER IS EXPRESSLY MADE AND ITS ACCEPTANCE IS EXPRESSLY LIMITED TO THE TERMS AND CONDITIONS CONTAINED HEREIN AND ATTACHED TO LAST PAGE	**AUTHORIZED SIGNATURE**	**TOTAL :**

CONFIDENTIAL – SUBJECT TO PROTECTIVE ORDER BRISTOW 011041

Ordre de Transfert
Transfer Order

Mouvement / Movement 501 (GI receipt w/o PO)

Article / Item 0001

No. 0000047304

Date

P&WC JR3-6911-E(2013-10)

N° d'établissment / Plant No.	0005	**N° de Document Number**	4511429749	**March. recus le / Goods Receipt Date**	2013.09.25
Description	Pratt & Whitney Canada			**Date du lour / Current Date**	2013.09.25
Lieu d'entrepos. / Storage Location	5CU	**Notre n ° de référence / Our Reference No.**			
Bon de commande / Sales Order		**N° de suivi / Tracking No.**		**Date d'expiration / Expiration Date**	

Matière / Material	3045377-01			**Quantité / Quantity**	1 EA
Description	POWER SECTION MODULE	**Lot / Batch**	KB0163	**Lot de verification / Inspection Lot**	0500002782381
SIMDUT / WHMIS		**Info. d'inspection / Inspection Info**			
No. de Série / Serial No.	KB0163				

Information d'entreposage - Warehouse Information

					Source	Destination
Destinataire / Recipient						
Point de décharg. / Unloading Point		**Demande de transfert n° / Transf. Require. No**	0000041594	**Type de stockage / Storage Type**	902	001
Cycle opér. Kanban / Kanban Control		**Priorité / Priority**		**Bac de stockage / Storage Bin**	GR-AREA	H9
Zone d'approv. Kanban / Kanban	-	**Stock spécial / Special Stock**	Q	**Type d'évaluation / Valuation Type**		CUSTOMER
Élément WBS Element	C-030407	Era Helicopters Inc.				
Nota / Text Notes	customer name as per shipping documents L.L.			**Profil de N° série / Serial Profile**	0005	

Émis par / Issued By PW37062

Signature ----------

Fin du document
End-of-document